B02－T151

Operation Manual

Panoramic Radiograph＆Cephaloradiograph

BelmaX CM

Notice to the operator and maintenance supervisor

＊Read this instruction manual before operation. After reading this manual, safely keep this near the X-ray machine for the easy access.

The classification is shown as follows

According to the type of protection against electric shock. : Class Ⅰ

According to the degree of protection against electric shock. : Type B applied part

TAKARA BELMONT U.S.A., INC.

１５．Operation Procedures for Cephalo Lateral (ＬＡ)

1. Learn the Panoramic radiographic operation procedures well. You can utilize Panoramic operating procedures for other modes.
2. If procedures are the same as the ones of Panorama, explanations of operation procedures in other modes are omitted. If you have any questions, Refer to operation procedures for Panorama.

１．Preparation for exposure

Set up CCD sensor

Hold CCD sensor by both hands and set up CCD sensor.

Secure CCD sensor by connecting sensor's hook and fall prevention's hook.

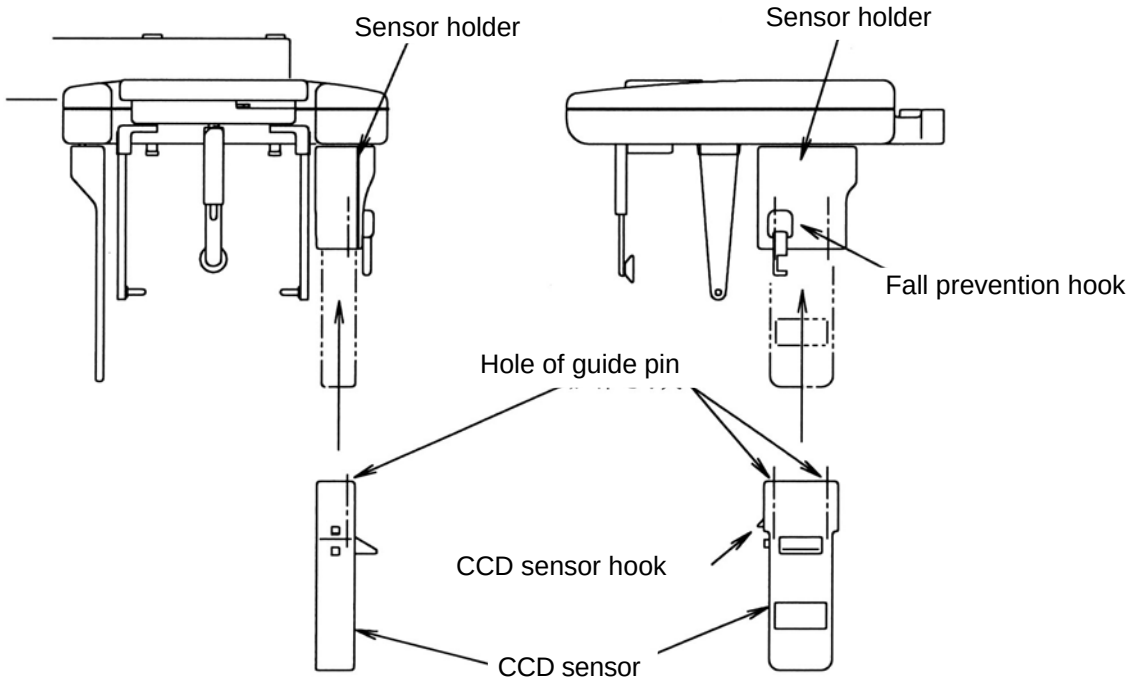

2. Turning power ON

3. Exposure Setting Screen

Click either “Import” or “Scan” from diagnosticsoftware / i maging software.

If the power of the equipment is ON,
click OK.

f you receive the message「Equipment is not at the original position. Push the RESET button.」
Then click the「RESET button」.

Set the exposure mode

Click Cephalo Lateral icon.
After select, icon will be changed to black.
Select either normal (4 sec) or short time (2.9 sec).

Setting ｋＶ（tube voltage）・ｍＡ（tube current）

Refer to article 17 for Cephalo Lateral exposure condition and setting exposure condition.

Setting ｋＶ（tube voltage）・ｍＡ（tube current）

Set kV
Click ｋＶ ▲（ＵＰ）・or ▼（ＤＯＷＮ）to set kV.
Set mA
Click mA ▲（ＵＰ）・or ▼（ＤＯＷＮ）to set mA.

4. Patient Positioning

4. 1. Aling Ear Rod with exposure direction

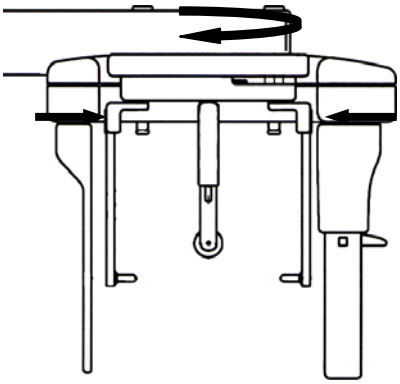

①Rotate Ear Rod by holding the fixing portion of Ear Rod, align Ear Rod to exposure direction of Cephalo Lateral.

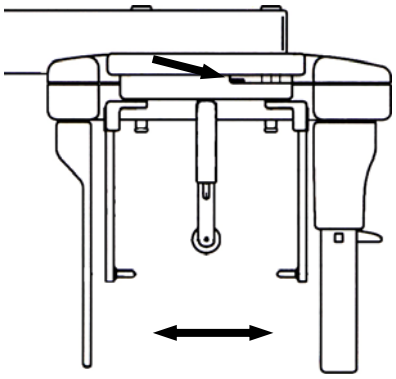

②Move Open-Close Lever for Ear Rod of Cephalo stat to open Ear Rod maximally.

Put X-ray protector apron on a patient and an assistant.

Guide a patient near to the equipment.

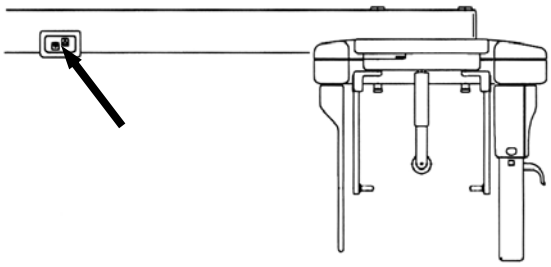

①Push either of UP or DOWN key of Cephalo ARM Up-Down Panel, and move Sliding Unit up and down to align position of Ear Rod to near of external auditory foramen.

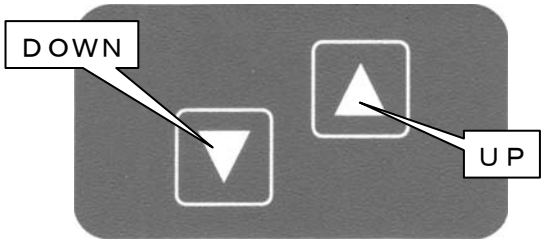

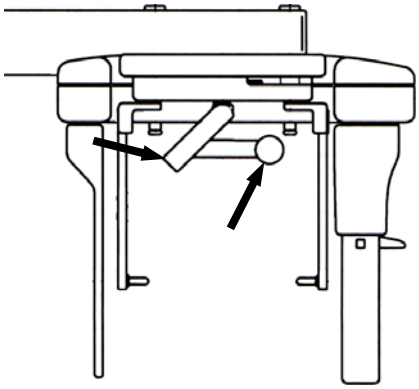

③ Take fitting part of forehead and pull forward.

④ Take fitting part of forehead by agley and collapse it.

Instruct a patient “Stand behind Cephalo ARM with both feet under center of Cephalo stat and by extending cervical vertebrae and back muscle.”.

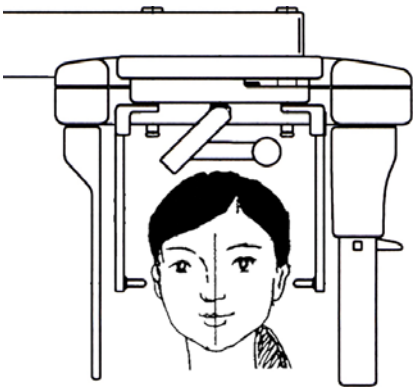

CAUTION
Pay enough attention to safety of a patient when Sliding Unit is moved up and down.

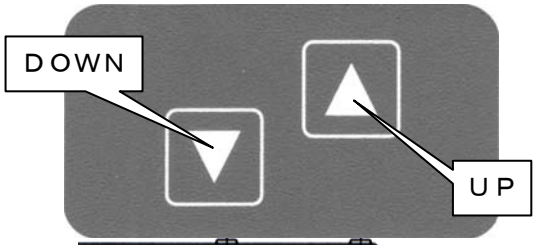

①Push either of UP or DOWN key ofUp and down Movement Panel on CephaloARM to insert ear rod into external auditoryforamen of a patient with fine adjustment.

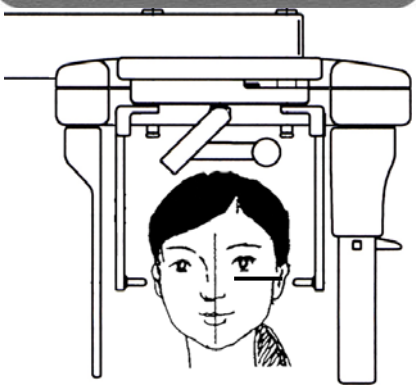

②Make Frankfort Plane of a patient horizontally.

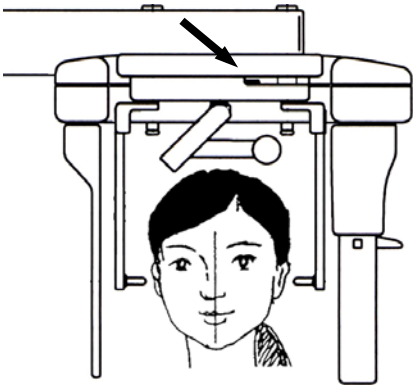

③Move ear rod open-close Lever on Cephalostat to close Ear Rod and insert Ear Rod in to external auditory foramen of a patient lightly and then fit Ear Rod.

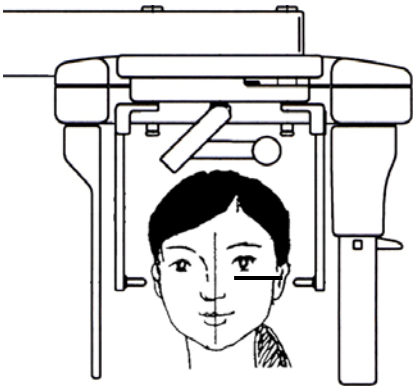

④After confirmation that Frankfort Plane of a p atient is horizontal, close Ear Rod to fix him certainly.

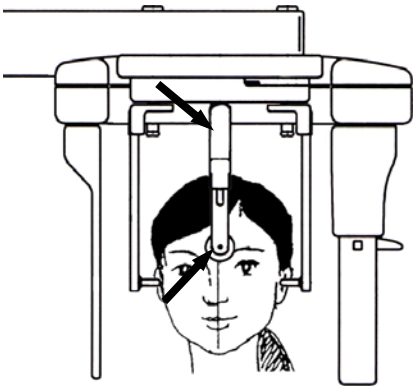

⑤Take a attaching portion of fitting part of forehead and move to vertically.
Return to satart position.

⑥Move fitting part of forehead and align patient's forehead position.

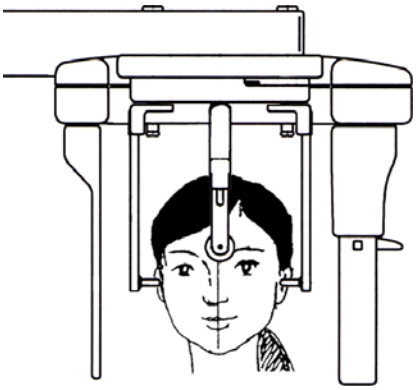

⑦Take and move a attaching portion of fitting part of forehead and put it to patient's forehead.

5. Ready ＯＮ

Refer to １１. Operation Procedure for Panorama

6. X-ray Exposure

WARNING

１. Other people excepting a patient and an assistant should be outside of X-ray room while X-ray is irradiated.
２. Operate “Exposure Switch” outside of X-ray room.
３. Keep to observe a patient and an assistant while X-ray is irradiated, and release Exposure switch if any trouble might happen.
４. An operator instructs a patient not to move during exposure.

NOTE

１. Deadman system is applied to exposure switch. When the exposure switch is released, X-ray irradiation and rotation of ARM Unit will be stopped.

6. １. Keep to push exposure switch until end of exposure.

6. ２. X-RAY is kept to indicated and buzzer keeps to sound during exposure.

6. ３. After exposure is finished, X-RAY indication will be lighted OFF, and buzzer will stop to sound and ARM Unit will stop to rotate at the same time.

＊Refer to section 11. Operation procedure for Panorama

7. COOLING TIME

Refer to １１. Operation Procedure for Panorama ９. COOLING TIME

8. Release of a patient

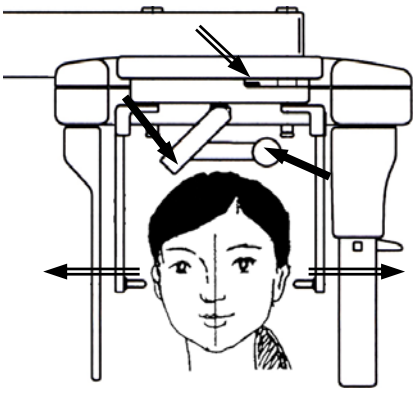

① Move open and close lever of Cephalo. Open ear rod maximally.
② Take fitting part of forehead and pull forward.
③ Take fitting part of forehead by agley and collapse it.

9. Returning ARM Unit to Panoramic Exposure Position

CAUTION
When push RESET key on exposure display, ARM Unit starts to rotate. Move away from rotation area of ARM Unit not by touching ARM Unit.

①Remove ＣＣＤ sensor

Hold ＣＣＤ sensor by left hand and raise falling prevention's hook by right hand then push hook release.

After release of hook, down ＣＣＤ sensor below and remove it.

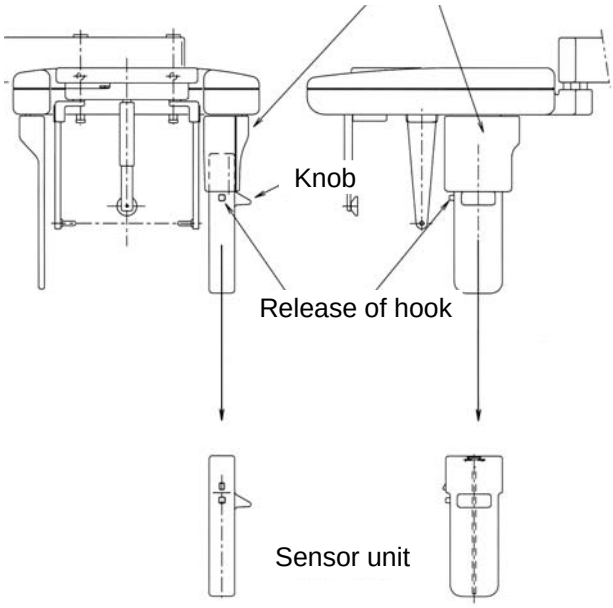

② Attach CCD sensor to Panorama

Refer to １１. Operation Procedure for Panorama and 1. Preparation for exposure.

③ Click ＲＥＳＥＴ key on exposure display.

④ ARM assy will move to start position for Panorama and stop automatically.

10. Confirm finish of cooling time

Refer to １１. Operation Procedure for Panorama

11. Turning Power OFF

Refer to １１. Operation Procedure for Panorama

１６．Operation Procedures for Cephalo Front (ＰＡ)

1. **Learn the Panoramic radiographic operation procedures well. You can utilize Panoramic operating procedures for other modes.**
2. **If procedures are the same as the ones of Panorama, explanations of operation procedures in other modes are omitted. If you have any questions, Refer to operation procedures for Panorama.**

１．Preparation for the exposure

Please refer to preparation procedure of Cephalo Lateral (15)

2. Turning power ON

3. Exposure Setting Screen

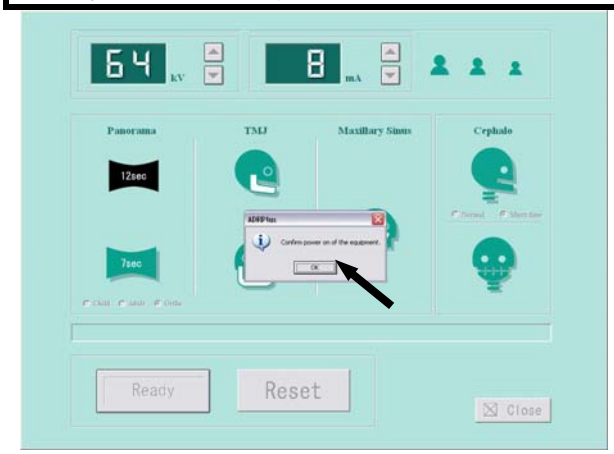

Click either “Import” or “Scan” from diagnostic software / imaging software.

If the power of the equipment is ON, click OK.

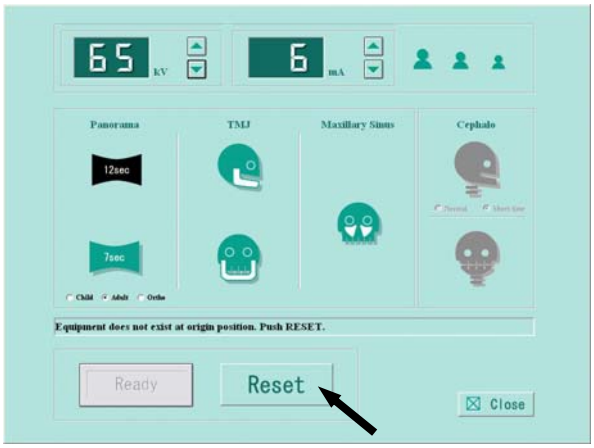

f you receive the message「Equipment is not at the original position. Push the RESET button.」Then click the「RESET button」.

Setting the exposure mode

Click Cephalo Front icon.
After select, icon will be changed to black.

⑥Setting ｋＶ（tube voltage）・ｍＡ（tube current）

Refer to article 17 for Cephalo Front exposure condition and setting exposure condition.

Setting ｋＶ
Click and select right side of ｋＶ ▲（ＵＰ）・ or ▼（ＤＯＷＮ）.
Setting ｍＡ
Click and select right side of ｍＡ ▲（ＵＰ）・ or ▼（ＤＯＷＮ）.
Or click upper right patient display.
In this case, depend on patient, adjustment of ｋＶ・ｍＡ will be necessary

4. Patient Positioning

4. １. Aling Ear Rod with exposure direction

NOTE
If Ear Rod is rotated by holding Ear Rod, it might happen that alignment of Ear Rod might be changed. When Ear Rod is rotated, be sure to hold the fixing portion of Ear Rod.

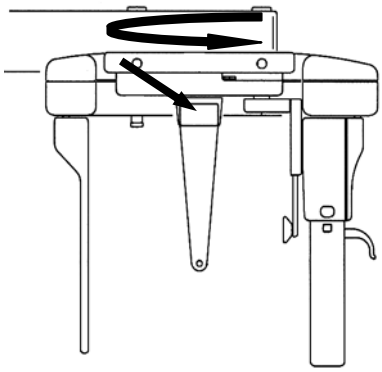

① Rotate Ear Rod by holding the fixing portion of Ear Rod, align Ear Rod to exposure direction of Cephalo Front.

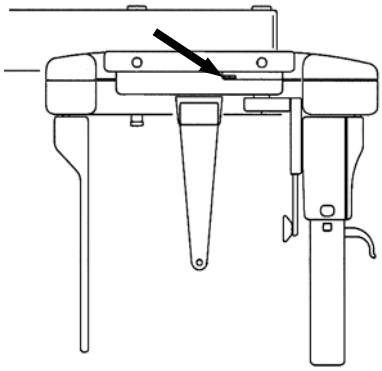

②Move Open-Close Lever for Ear Rod of Cephalo stat to open Ear Rod maximally.

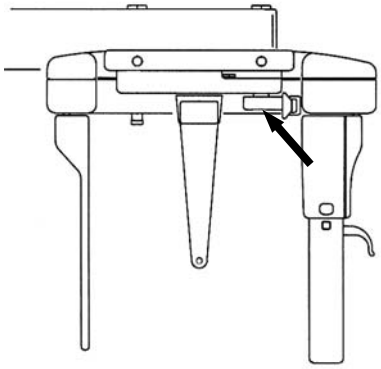

③Align Nasion Pad horizontally.

4. ２. Put X-ray protector apron on a patient and an assistant.

4. ３. Guide a patient near to the equipment.

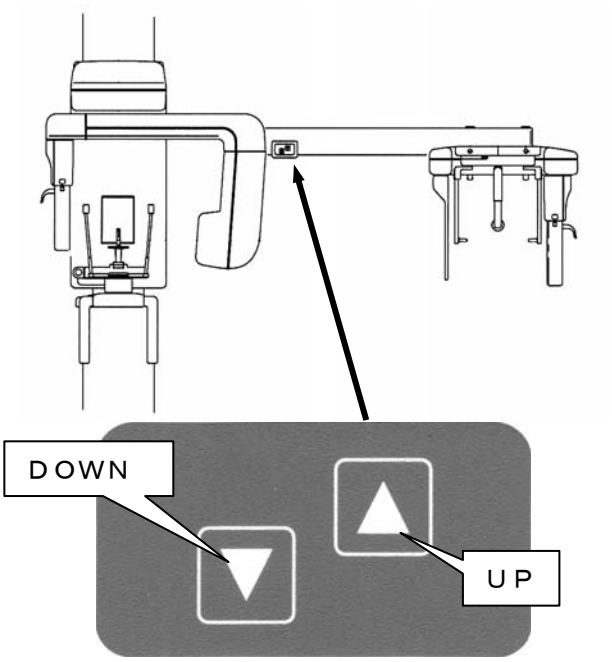

＊Push either of UP or DOWN key of Cephalo ARM Up-Down Panel, and move Sliding Unit up and down to align position of Ear Rod to near of external auditory foramen.

4. 4. Instruct a patient “Stand behind Cephalo ARM with both feet under center of Cephalo stat and by extending cervical vertebrae and back muscle.”.

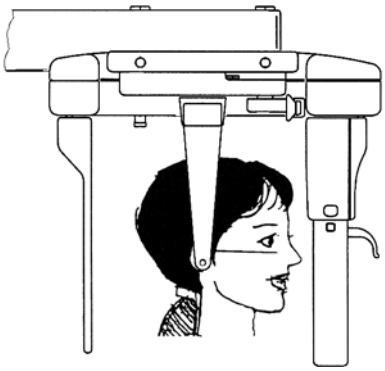

4. 5. Positioning of patient.

CAUTION
Pay enough attention to safety of a patient when Sliding Unit is moved up and down.

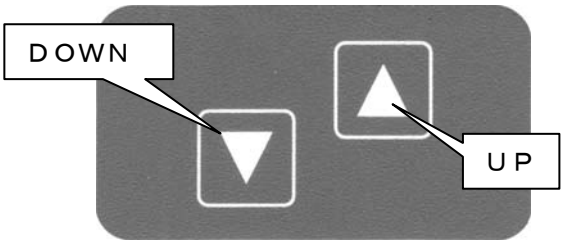

③Push either of UP or DOWN key of Up and down Movement Panel on Cephalo ARM to insert ear rod into external auditory foramen of a patient with fine adjustment.

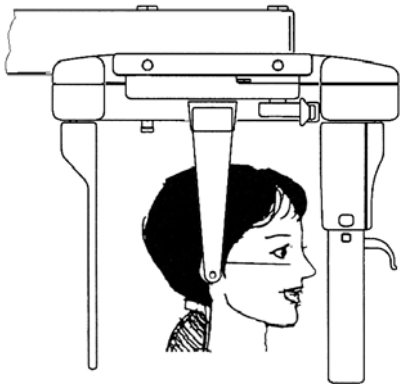

④Make Frankfort Plane of a patient horizontally.

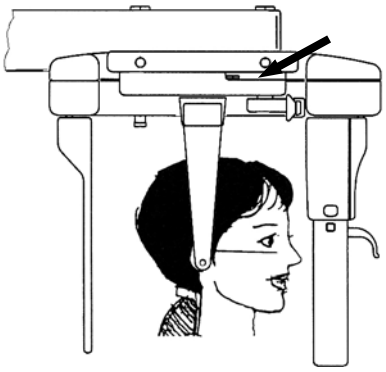

⑤Move ear rod open-close Lever on Cephalo stat to close Ear Rod and insert ear rod in to external auditory foramen of a patient lightly and then fit Ear Rod.

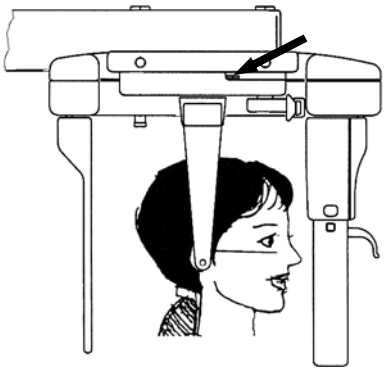

④After confirmation that Frankfort Plane of a patient is horizontal, close Ear Rod to fix him certainly.

5. Ready ＯＮ

Refer to １１. Operation Procedure for Panorama

6. X-ray Exposure

Refer to １5. Operation procedure for Cephalo (LA)

7. COOLING TIME

Refer to １1. Operation Procedure for Panorama

8. Release of a patient

Refer to １5. Operation Procedure for Cephalo (LA)

9. Returning ARM Unit to Panoramic Exposure Position

Refer to １5. Operation Procedure for Cephalo (LA)

10. Confirm finish of cooling time

Refer to １１. Operation Procedure for Panorama

11. Turning Power OFF

Refer to １１. Operation Procedure for Panorama　１4. Turning Power OFF.

１７．Table of Exposure Settings

Set exposure factors by consideration of size, age, bone density, etc. of a patient.

１．Panorama

１．１．Exposure time 12sec

１）Panorama Child : CHILD ORBIT

ＡＧＥ	ＳＥＸ	ｋＶ	ｍＡ
Child	－	60	8

２）Panorama Adult : ADULT ORBIT

ＡＧＥ	ＳＥＸ	ｋＶ	ｍＡ
Adult	Female	62	8
	Male	64	8

３）Orthoradial Orbit : ORTHO ORBIT

ＡＧＥ	ＳＥＸ	ｋＶ	ｍＡ
Adult	Female	62	8
	Male	64	8

１．２．Exposure time 7sec

１）Panorama Child : CHILD ORBIT

ＡＧＥ	ＳＥＸ	ｋＶ	ｍＡ
Child	－	60	8

２）Panorama Adult : ADULT ORBIT

ＡＧＥ	ＳＥＸ	ｋＶ	ｍＡ
Adult	Female	62	8
	Male	64	8

３）Orthoradial Orbit : ORTHO ORBIT

ＡＧＥ	ＳＥＸ	ｋＶ	ｍＡ
Adult	Female	62	8
	Male	64	8

２．Maxillary Sinus Radiography

ＡＧＥ	ＳＥＸ	ｋＶ	ｍＡ
Child	－	60	8
Adult	Female	62	8
	Male	64	8

３．TMJ Lateral (4 sections)

ＡＧＥ	ＳＥＸ	ｋＶ	ｍＡ
Child	－	62	10
Adult	Female	64	10
	Male	66	10

４．TMJ Front (2 sections)

ＡＧＥ	ＳＥＸ	ｋＶ	ｍＡ
Child	－	62	10
Adult	Female	64	10
	Male	64	10

５．Cephalo Lateral (ＬＡ) normal exposure

ＡＧＥ	ＳＥＸ	ｋＶ	ｍＡ
Child	－	86	12
Adult	Female	88	12
	Male	90	12

６．Cephalo Lateral (ＬＡ) short time exposure

ＡＧＥ	ＳＥＸ	ｋＶ	ｍＡ
Child	－	86	12
Adult	Female	88	12
	Male	90	12

７．Cephalo Front (ＰＡ)

ＡＧＥ	ＳＥＸ	ｋＶ	ｍＡ
Child	－	86	12
Adult	Female	88	12
	Male	90	12

１８．Magnification of Image

Radiographic Mode		Orbit		Magnification
ＰＡＮＯＲＡＭＡ	: PANORAMA	ＣＨＩＬＤ　ＯＲＢＩＴ	: Child	1.24～1.34
		ＡＤＵＬＴ　ＯＲＢＩＴ	: Adult	1.21～1.32
		ＯＲＴＨＯ　ＯＲＢＩＴ	: Ortho	1.23～1.36
ＭＳ	: Maxillary Sinus		: Maxillary Sinus	1.20～1.22
ＴＭＪ	: ＴＭＪ	ＬＡ　４ＳＥＣＴＩＯＮ	: Lateral (LA)	About 1.24
		ＰＡ　２ＳＥＣＴＩＯＮ	: Front (PA)	About 1.88
ＣＥＰＨＡＬＯ	: CEPHALO	ＬＡ	: Lateral (LA)	1.1
		ＰＡ	: Front (PA)	1.1

１９．DAILY MAINTENANCE

Cleaning and Disinfection

Parts	How to maintenance
Bite Blocks (For Panorama)	Sterilize by AUTO-CLAVE after exposure(s) of each patient.
Head Holding Rods	Make enough disinfection with alcohol for medical use, of which alcohol degree is over 76%. after exposure of each patient
Ear Rods (TMJ Lateral 4 sections)	
Ear Rods (TMJ Front 2 sections)	
Chinrest (Panorama)	
Chinrest (Maxillary Sinus)	
Nasion Pad	
EAR Rods (For Cephalo)	
FOREHEAD REST (For Cephalo)	
All other parts which patients touch.	
All other parts which operator touch.	Make enough disinfection with alcohol for medical use, of which alcohol degree is over 76%, at end of daily operation.
Outside cover of the equipment	Wipe equipment with a dry cloth at end of daily operation.

２０．Trouble Shooting

１．POWER can not be turned ON

Check	Treatment
Is breaker turned on?	Turn breaker on.
Is power plug connected to outlet?	Connect power plug.

２．READY can not be turned on

Check	Treatment
Is positioning of ARM at starting place?	Depress RESET key.

３．Error message on PC display

Treat by following message on display.

Display
Motor of first collimator error. Depress RESET.
Head motor error. Depress RESET button.
Invertor error. Depress RESET button.
Vessel temperature error. Depress RESET button.
Motor of Y axis error. Depress RESET button
Motor of rotation error. Depress RESET button
Motor of indicator error. Depress RESET button
Motor of cephalo error. Depress RESET button
X-ray SW error. Depress RESET button
Communication error between MAIN CPU-MOTOR and CPU. Depress RESET button
Communication error between PC and MAIN CPU. Depress RESET button

If you can not solve problem by treatment of following display, turn off the power and turn on the power again.

＊ When the trouble cannot be resolved, turn power of the equipment OFF, and remove electric power socket from electric outlet, and call to our agent or our office where are near you.

In case that CCD Sensor has a problem
Turn the power of the PC off
Turn the power of the Panoramic radiograph off.
Turn the power of the Panoramic radiograph on again
Turn the power of the PC on again and restart the PC
Check the condition of LED (green color)
If the green LED is not blinking, check the connection between the PC and the Sensor unit

２１．MAINTENANCE

⚠ Warning

High voltage is applied to inside of the equipment. Do not open the cover by yourself.
Before asking for a repair, turn the power of the equipment OFF, and unplug from the power outlet.
After unplugged the equipment, wait for 10 minutes before starting a service work.

Special knowledge and special measuring tools are required to check this equipment.

To ensure that X-ray unit functions within the manufacturer's specifications and remains in compliance with Standards, daily checking (by eyes) and a periodic maintenance by the dealer service personnel are recommended.

Maintenance by service personnel 1-2 times/year

Check Item	Purpose	Action	Method
Electricity Condition	Check voltage range	Check whether incoming voltage is within the equipment's requirement or not.	●
External Appearance	External Appearance	A) Deformation, scratches.	◎
		B) Warning Labels	◎
	Inside of the equipment	Check stain and dust	●
Installation place	Temperature & Humidity	Check compatibility of the environmental conditions to operate the equipment	●
	Level of floor	Check the influence to the equipment	●
	The Installation condition of the equipment	Check vibration and movement stability of the equipment	●
	Check obstacles	Make sure that there are no obstacles within the movement range of the equipment	◎
	Rust	Check the condition of the rust. Evaluate the influence to the safety.	◎
Safety Test for Electric Shock	Insulation Resistance	Check the resistance between a power line and the earth	●
	Leaked current from the outer cover	Check the current which is leaked from the outer cover of the equipment to the earth	●
	Earthing resistance	Check the resistance value between an exposed metal and the earth	●
	Resistance of the Earth wire	Resistance between the earth terminal and the earthing point	●
Movement Accuracy of the equipment	Power Circuit voltage	Check the voltage of the power circuit	●
	Check Radiographic Circuit	Check the wave shape and the setting values of the radiographic circuit	●
	Check Control Circuit	Check the movements of operating sequences	●
	Accuracy of the Positioning Mechanism	Check the deterioration of the positioning mechanism	●
	Check the Movement of the Protection Circuit	Check the setting values of the protection circuit. Check the movement of the protection circuit.	●
	Check display circuit	Check the functions of display circuit	●

Check Item	Purpose	Action	Method
Display during an exposure	Check irradiation of X-ray and “X-RAY ON” display are in sync	Check this while X-ray is irradiated.	◎
X-ray Generator	X-ray tube	Check the leakage of insulation oil	◎
	Low voltage cables	Check wear, damage, tension, and twist	◎
	Cone	Check looseness, transformation, and damage	◎
	Filter	Check transformation and damage	◎
	Slit Plate (Collimator)	Check off-alignment of exposure field. Confirm the exposure width	●
Radiographic mechanism	Movement of the ROTATION ARM ASSY	Check slip, abnormal sound, and stopping accuracy	◎
	Patient Positioning Mechanism	Play, looseness, operational performance, and safetyness	◎
	Positioning beams	Check the brightness and the positioning accuracy	◎
Sliding mechanism	Wire Rope	Check cut, check the wire is securely connected to the terminal	●
	Upward / downward movements	Check smoothness of the movement	◎
	Drop prevention mechanism	Check safety mechanism works properly	●
X-ray output	X-ray Tube Voltage	Check X-ray Tube voltage	●
	X-ray Tube Current	Check X-ray Tube current	●
	Exposure Time	Check exposure time	●
Accessories	Intensifying Screen	Check crack and scratch	◎
	Film Cassette	Check crack and scratch	◎

Checking Methods

◎ : Check by eyes during a daily operation

● : Check by a service personnel.

２２．Physical Dimensions

BelmaX CM

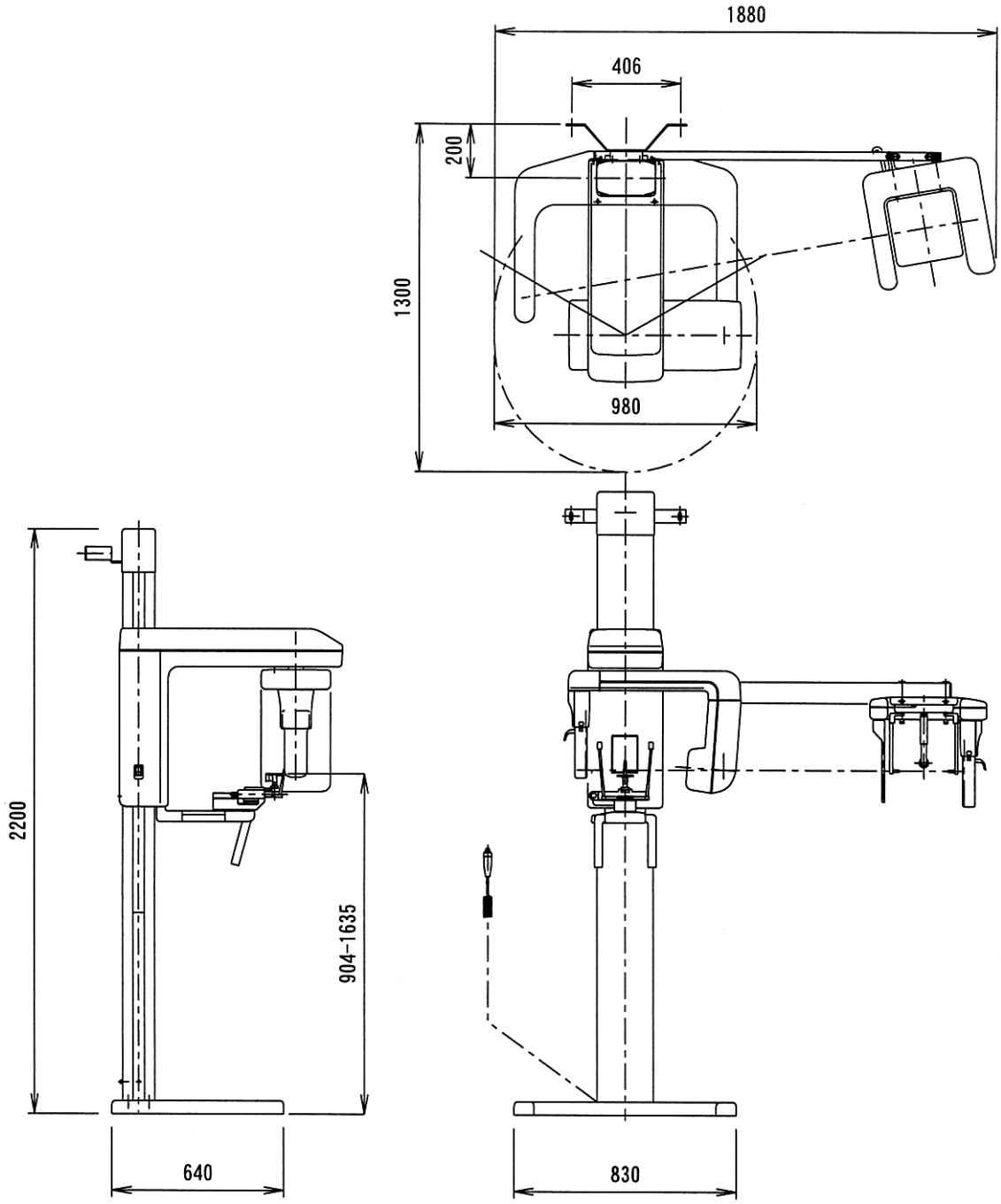

２３．Technical data

１．Wall Bracket.

The distance between the column and a wall is 6.1” (155 mm).

２．Compliance with International Standards

ANE-BEL, ANA-BEL CM complies with the following standards

ＩＥＣ　６０６０１－２－７　（１９９８）
ＩＥＣ　６０６０１－２－２８（１９９３－０３）
ＩＥＣ　６０６０１－２－３２（１９９４－０３）

３．Classification

１．According to the type of protection against electric shock
a) Equipment energized from external electrical power source.
Class I equipment
２．According to the degree of protection against electric shock
Type B applied part
３．Protection against Ingress of water
Ordinary
４．Equipment not suitable for use in the presence of a FLAMMABLE ANAESTHETIC MIXTURE WITH AIR OR WITH OXYGEN OR NITROUS OXIDE
５．According to the mode of operation:
Continuous Operation with Short-Time Loading
６．Duty cycle:
Exposure Time: 12 sec, Cooling Time: 90 sec

４．Remaining Risk

１．Occurrence of the excesse X-ray dosage due to malfunction of software during exposure
Signal to Watch Dog IC (works to reset if the signal is in the same condition over 1.6 sec.) observes the operating condition of the software.
２．If excessive X ray is irradiated due to the mechanical malfunction, immediately turn the X-RAY SWITCH OFF. to stop the irradiation.
３．Operator instructs a patient not to move until the movement of the ROTATION ARM stops during a RESET process.
４．ANA-BEL monitors the temperature of the X-ray generator from READ ON to the end of the exposure.
If X-Ray generator malfunctions due to the unusual temperature in X-ray tube, radiography will be terminated and ERROR will be displayed.
５．Operator instructs a patient not to move during an exposure.
Also, operator should pay attention to a patient, an assistant, and the equipment during an exposure.

５．Environmental condition to operate the equipment is as follows.

Environmental condition to operate the equipment
The temperature: 41~95F (5～35℃)
The humidity : 30-85%
The atmospheric pressure: 700-1060hpa

６．The environmental condition to transport the equipment is as follows.

Environment to transport the equipment
The temperature: 14~140F (－10～60℃)
The humidity : 30-85%
The atmospheric pressure: 700-1060hpa

７．X-ray Generator

１．Maximum electric output
Maximum X-ray tube voltage: 90kV
Maximum X-ray tube electric current: 12mA

２．Nominal maximum electric power for output of 90kV, 12mA.
1.08ｋW

３．Standard Tube Voltage, Current and Time
１２０ｍＡｓ（７５ｋＶ、１０ｍＡ、１２ｓｅｃ）

４．Minimum Tube Current and Time
２４ｍＡｓ（２ｍＡ、１２ｓｅｃ）

５．Nominal Capacity of Anode Input
１.７５ｋW

６．Maximum Capacity of Anode Heat
３５ｋＪ（５０ｋＨＵ）

７．Material of X-ray Tube Anode
Tungsten

８．target angle of X-ray Tube
５°

９．Angle of X-ray Tube Focus Angle
５°

１０．Size of X-ray Tube Focus
０.５×０.５（ｍｍ）

１１．Characteristic Filtration of X-ray Tube
０.８ｍｍＡｌ

１２．Nominal Tube Voltage of X-ray Tube
５０～１００ｋＶ

１３．Rating of X-ray Tube Filament
３.５～４.９Ｖ　３.５Ａ
Refer to Characteristic Drawing of Emission for Cathode

１４．Supplied Voltage of Primary Side for 50-100kV Output
About 150 Vp (PWM)

１５．Weight of X-ray Generator About 7.13 kg

１６．Leaked Dose of the X-ray Generator
Refer to the attached document paper.
Loading Factor to measure leakage of X-ray Generator: 90kV, 12mA, 20sec

１７．Type of X-ray Generator
ＣＬＡＳＳ Ⅰ

１８．Standard Angle to assemble X-ray Generator
Horizontal / perpendicular

１９．Target Angle to assemble X-ray Generator
５°

２０．Precision to install focus of X-ray Generator at time of construction of X-ray Generator
±０.５mm

２１．Size of the focus at time of installation of X-ray Generator
０.５×０.５（mm）

２２．Duty Cycle
Cooling time for this X-ray Generator is 90 seconds to avoid the accumulation of excessive heat. X-RAY operation is unavailable for 90 seconds after each exposure.

８．Aluminum equivalent

Name of part	Aluminum equivalent
Filter	0.8mmAl
Sliding Unit Cover	2.0mmAl
Ear Rod(TMJ 1 & 2)	0.2mmAl
Head Holder	0.2mmAl
Film Cassette	1.2mmAl
Intensifying Screen	3.0mmAl
Bite Block	1.0mmAl

９．Rating of Line Switch

250V, 15A

１０．Maximum Energy Input per 1 hour

1728mAs / h

１１．Rotation Speed of ARM

0.85km/h.

１２．Rotation Force of ARM

3.7kgf.

１３．Staments of Reference Loading Condition

90kV, 12mA, 12sec (ANA-BEL)
90kV, 12mA, 3.2sec (ANA-BEL CM)

１４．Laser Marking

Class : 2 products (IEC60825-1: 2001)
Wave Length: ６７０ｍｍ
Standard : １ｍW

１５．Line impedance

0.3Ω

２４． Contact Information

Belmont Equipment
A Division of TAKARA BELMONT USA, Inc.
101 Belmont Drive
Somerset, NJ 08873
Toll Free (800) 223-1192
Toll Free Fax (800) 280-7504
www.belmontequip.com

TAKARA COMPANY, CANADA, LTD.
2706 South Sheridan Way
Mississauga, Ontario, Canada L5J 2M4
Toll Free (800) 268-5351
Fax (905) 822-6203
www.takarabelmont.ca

２５. Revision data of this manual

This manual was revised on JUL.2006.

The revised document number ：Ｂ０２－Ｔ145

Ｂ０２－Ｔ１５１

Thank you very much for purchasing our equipment Model BelmaX CM.
Please read this operation manual carefully before operation in order to use the X-Ray machine properly and safely.

CONTENTS

	pages
０１．INTRODUCTION	2
０２．WARNING	3
０３．Explanation of Equipment	2
０４．Specifications	2
０５．Standard Accessories	1
０６．Name of each parts	2
０７．Explanation of each parts	2
０８．Exposure setting screen / Control Panel	4
０９．Preparations before exposure	2
１０．Flow Chart of Exposure Process	1
１１．Operation Procedure for Panorama	14
１２．Operation Procedure for Maxillary Sinus	6
１３．Operation Procedure for TMJ Lateral (4 sections)	7
１４．Operation Procedure for TMJ Front (2 sections)	6
１５．Operation Procedure for Cephalo Lateral(ＬＡ)	9
１６．Operation Procedure for Cephalo Front(ＰＡ)	6
１７．Table of Exposure Factors	2
１８．Magnification of Image	1
１９．DAILY MAINTENANCE	1

CONTENTS

２０．Trouble Shooting and Error Code List 1

２１．MAINTENANCE 2

２２．Physical Dimensions 1

２３．Technical data 4

２４．Contact Information 1

２５．Revision Record of this manual 1

０１．INTRODUCTION

１．Read this manual carefully when you use this equipment for the first time.

２．Be sure to observe warning sentences and forbidden matters at the operating time of the equipment.

３．Read the operation manual from the beginning to the end.
Reading the operation manual from halfway might lead to misunderstanding.

４．Read this manual again to confirm the portion in question if you have any questions.

５．Operation procedure of Panoramic radiograph is basis of X-ray radiograph.
Your can use this procedure for other radiograph (i.e. MS, TMJ)

６．Explanation of operation procedure of other radiograph are omitted, if the procedures are same as the one of Panoramic radiograph.
Refer to operation procedure of panoramic radiograph, if you have any questions about operating procedures.

７．Discharge
Be sure to observe the contents of this operation manual.
Even if any trouble or an accident will happen due to wrong use, we will not be responsible for them.

８．Warrantee Period
Warrantee period is two years after purchase of the equipment.
We will repair failure or defect by this warranty. This warranty is void when failure or defect is caused by conditions beyond the manufacturer's control, such as damage resulting from mishandling, neglect, misuse, improper maintenance, accident or alteration or repair by anyone other than Belmont or authorized Belmont dealer. See warrantee card for more information.

Operation condition.

９．Maintenance
Be sure to make proper maintenance of your equipment.
Maintenance responsibility of medical equipment lies on the user.

１０．Period for repair and supplying parts
We will supply parts of the equipment for 10 years, after the manufacturing of this equipment is discontinued.

１１．⚠ mark means " Attention, consult accompanying documents ".

１２. mark means “ Protective earth(ground) “.

１３. mark means “ OFF (Power: disconnection from the mains) “.

１４. mark means “ ON (Power: connection to the mains) “.

１５. mark means “Type B“ Applied part

１６. No user serviceable items inside.

１７. Conformability of indicated X-RAY requirement was determined in accordance with R10 sequences that follows ISO497.

０２．WARNING

⚠ WARNING:

Always conform to the safety work standards.

Repair work for internal parts of the equipment involves high risk. This should be strictly conducted by an authorized service personnel only.

NOTES:

Details of WARNING are stated as follows in this manual:

⚠ DANGER:

Explains danger that may cause serious adverse effect to a human body.

⚠ WARNING:

Explains an instruction where a personal injury or a physical damage may occur.

⚠ CAUTION:

Explains an instruction that should be observed for safety reasons.

NOTE:

States descriptions which serve to improve work efficiency and to help user to understand instructions in the manual.

DANGER

This equipment is electrical equipment. Do not splash water.

Such action causes an electric shock or a trouble of the equipment.

⚠ WARNING

Any user should not open any cover of the equipment.

⚠ WARNING

The management responsibility of use and maintenance of this equipment belongs to the user
The operation of this equipment is limited only to legally qualified persons.
User should not open the cover of the equipment.

Contact your dealer for service.

⚠ WARNING

This equipment should be installed in the X-ray room surrounded by walls that have over 1.0 mmPb lead equivalence. The exposure switch should be installed outside of the X-ray room.

⚠ WARNING

When earthquake is warned, do not use the equipment.
After earthquake occurred, check the equipment and make sure the equipment works properly.

⚠ WARNING

This X-ray Unit may be dangerous to patient and operator, if safe exposure factors and operating instructions are not observed.

⚠ WARNING

Do not put things in area where the equipment moves.

⚠ WARNING

Put a X-ray protective apron on the patient.

⚠ WARNING

Disinfect the area where a patient and an operator might touch after each exposure.

⚠ WARNING

Operator should pay attention to a patient when the Sliding Unit moves up and down.

⚠ WARNING

When the equipment is not used, turn off “Power SW “

⚠ WARNING

When the equipment has trouble, turn off “Power SW “.

⚠ WARNING

During an X-Ray exposure, only a patient and a helper (who is permitted to enter by an operator) are allowed to stay in X-Ray room.

The helper (hereinafter helper) in this manual, is defined as person who a doctor permits to assist a patient while taking a X-ray radiograph.

⚠ WARNING

Do not press the exposure switch in the X-ray room.
Watch a patient and the equipment during an exposure.

When you encounter any trouble, immediately release the exposure switch.

⚠ WARNING

LASER, DOT NOT STARE INTO BEAM, CLASS 2 LASER PRODUCT

1. Laser Beam is applied. For safety, instruct a patient not to look at the laser beam.
2. Before the beam is lightened, lower the Frankfort Line Beam to the bottom.
3. Do not set the beam to patient's eyes.

⚠ CAUTION

When the equipment and/or its' parts will be disposed, contact the dealer or our office.

⚠ CAUTION

Disposal Process:
Dispose used bite fork covers and films according to the disposal procedures indicated by each manufacturer and the local code.

⚠ CAUTION

Do not turn the Rotation Arm by hands. It might cause trouble of the equipment.

⚠ CAUTION

Operator shall instruct a patient not to move while X-ray exposes.

Operator shall instruct a patient not to move until the movement of ARM is finished during RESET movement.

⚠ CAUTION

The equipment shall be connected to the receptacle marked “Hospital Only” or “Hospital Grade”.

０３．Explanation of Equipment

１．Outline

BelmaX CM can take radiographs of Panorama, TMJ, Maxillary Sinus, and Cephalo.

2. Features

２．１．Radiograph with multiple orbits

Every kinds of Panoramic radiograph can be taken in the Maxilla-Facial radiograph such as Panorama and TMJ.

２．２．Panoramic radiograph with less overlap of teeth

By the orthoradial panoramic mode, a panoramic radiograph with less overlap can be taken.

２．３．High Frequency X-ray Generator

The X-ray generator with the High Frequency Inverter delivers high quality radiation. This enables improved image quality while reducing radiation dose.

２．４．X-ray Tube with minute focus

Owing to the minute X-ray Tube focus of 0.5 x 0.5mm, sharp and clear image is achieved.

２．５．Versatile Combination of Exposure Factors

Tube voltage can be set from 60 kV to 90 kV by 1 kV step.
Tube current can be set at 2, 4, 6, 8, 10, and 12mA.
With wide range of exposure setting, BelmaX CM can get ideal radiograph for every type of patient.

２．６．Patient Positioning with 3 Beam Lines

Bright and Visible three laser beams make positioning very easy and accurate.

２．７．Adjustable Mirror for Patient Positioning

The Angle of the mirror can be changed, both patient and operator can easily check the patient positioning.

２．８．Motorized Sliding Unit

The Motorized Sliding Unit enables smooth operation and fine adjustment for the precise positioning.

３．Configuration

Equipment consists of below assemblies.

1. Mechanical Assemblies, 2. X-ray Generator, 3. X-ray Controller
4. Cephalo Assembly:

４．Available Radiographic Modes

Panorama
TMJ Lateral
TMJ Front
Maxillary Sinus
Cephalo Lateral
Cephalo Front

０４． Specifications

Model	Digital Panoramic and Cephalometric Radiograph BelmaX CM	
Input Power	120Vac 60Hz 1φ	
Power	２．０kW	
High Tension Generator	High Tension Generator (100kHz)	
Exposure Method	Manual	
Tube Voltage	60kV～100kV (1kV step)	
Tube Current	2.4.6.8.10.12mA (2mA step)	
X-ray Tube	Ｄ－０５２ＳＢ (Toshiba)	
Focal Spot	０．５×０．５mm	
Total Filtration	２．５mmＡｌ (Min)	
CCD sensor	Both as Panorama and Cephalo	
Exposure Mode	Panoramic — Child / Adult / Orthoradial Maxillary Sinus TMJ — Lateral / Frontal	Cephalo — Lateral / Frontal
Exposure Time	Panorama : 7sec／12sec Maxillary Sinus : 8sec TMJ Lateral : 3.0sec(×4) TMJ Frontal : 3.0sec(×2)	Cephalo Lateral : 2.9sec(short time mode) 4sec(normal time mode) Frontal : 3.2～5sec
Magnification	Panorama : 1.21～1.36 Maxillary Sinus : 1.2～1.22 TMJ Lateral : appr.1.24 TMJ Frontal : appr.1.88	Cephalo Lateral & Frontal: 1.1
Positioning Beam	3 beams	
Positioning tools	Panorama・Maxillary Sinus : Chin Rest+ Head Holding Rod ＴＭＪ Lateral・Frontal : Ear Rod	—
Weight	417 lb(189 kg)	

Environmental condition for Operation
Temperature : 41~95F (5～35℃)
Humidity : 30～85%
Pressure : 700～1060 hpa

Environmental condition for Storage
Temperature : 14~140F (－10～60℃)
Humidity : 10～95%
Pressure : 700～1060 hpa

Environmental condition for Transportation
Temperature : 14~140F (－10～60℃)
Humidity : 10～95%
Pressure : 700～1060 hpa

05. Standard Accessories

1. Head Holding Rods (Panorama)
(Maxillary Sinus)

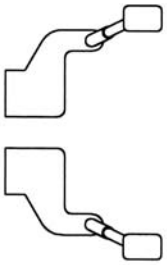

2. Ear Rods (TMJ Lateral 4 sections)

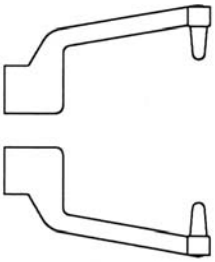

3. Ear Rods (TMJ Front 2 sections)

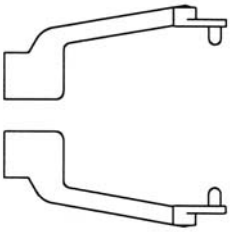

4. Chinrest (Panorama)

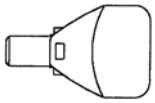

5. Chinrest (Maxillary Sinus)

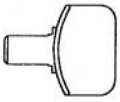

6. Bite Fork (Panorama)

7. Bite Fork Cover(Disposable)

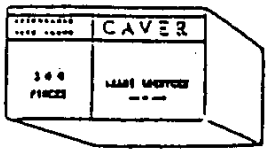

8. X-ray Switch Holder

０６．Name of each parts

BelmaX ＣＭ

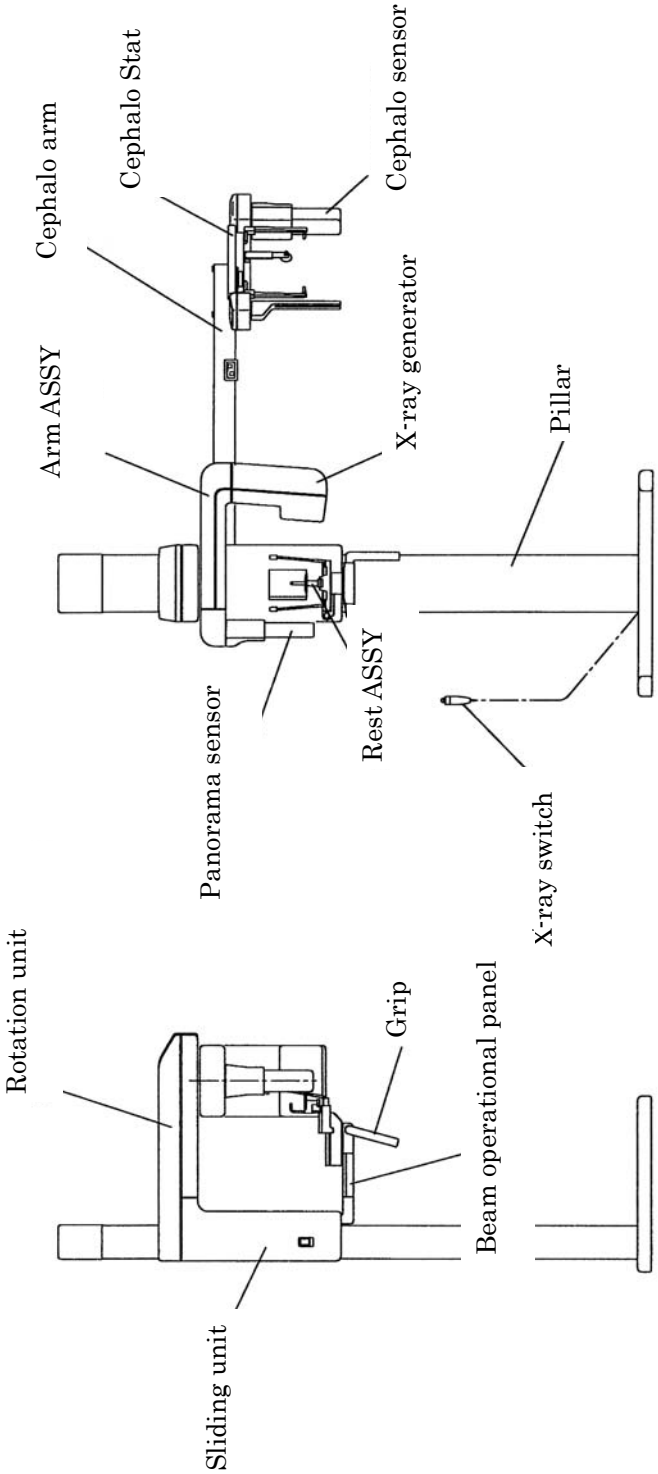

Dimensions

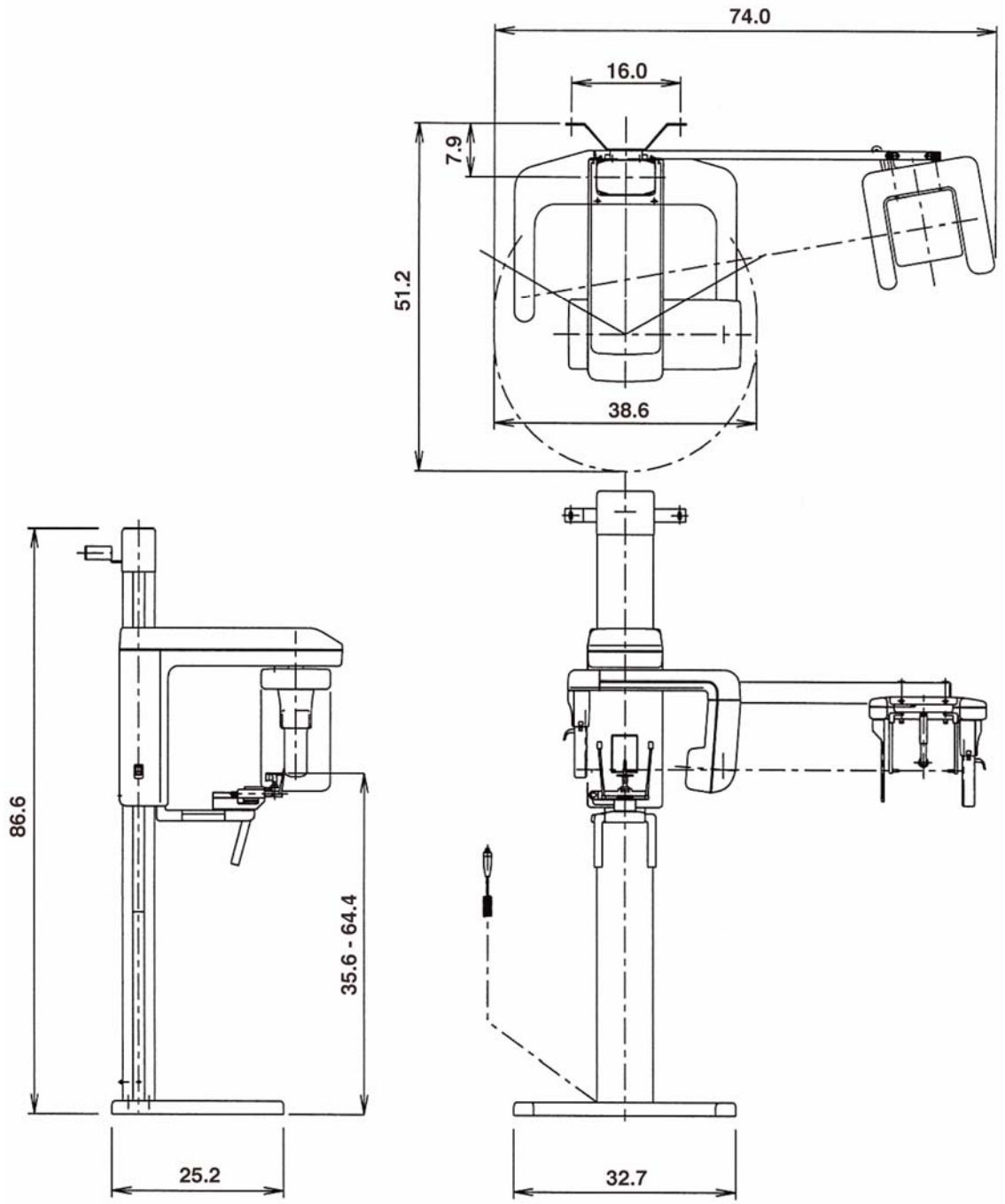

ＣＣＤ sensor（Name and size）

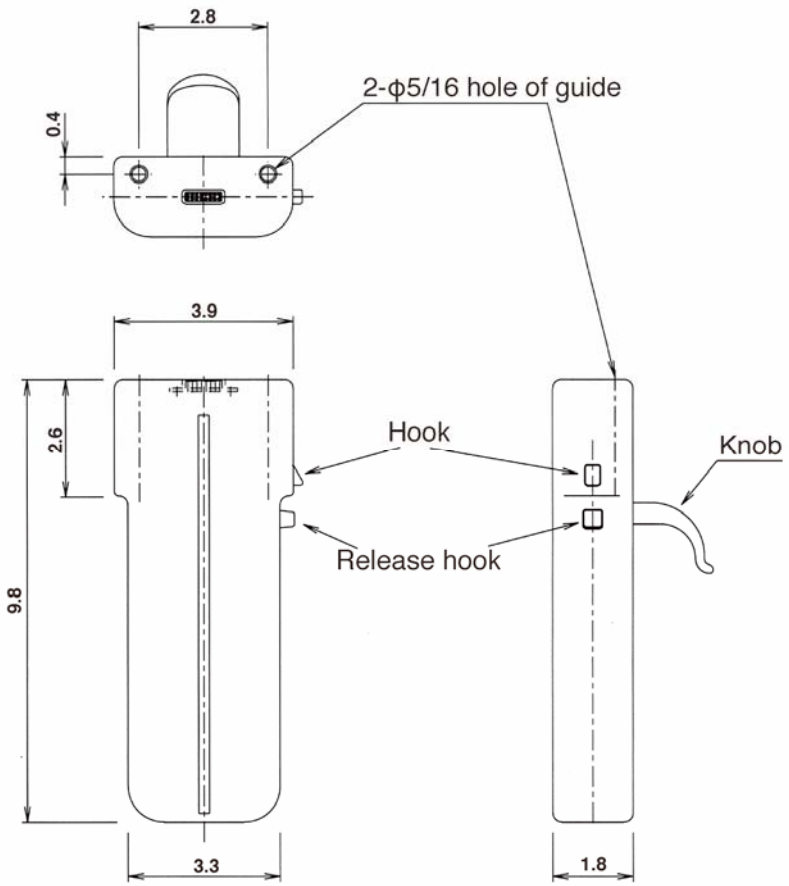

０７．Explanation of each parts

１．POWER SWITCH

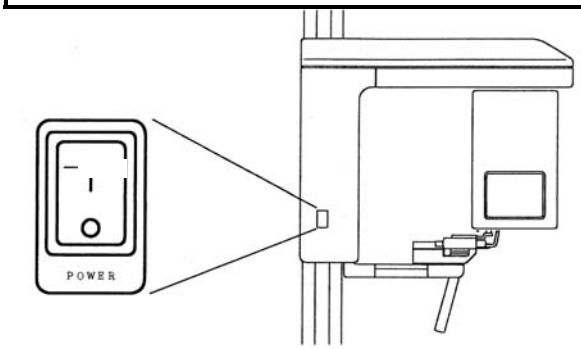

＊This switch is used to turn power ON/OFF.
To turn power ON:
Push “ I “ on the power switch.
To turn power OFF:
Push “O” on the power switch.

２．Beam Line Operation Panel

＊Use this to adjust positioning beam lines.

３．Knob to open and close the Head Holding Rod and Ear Rod (TMJ)

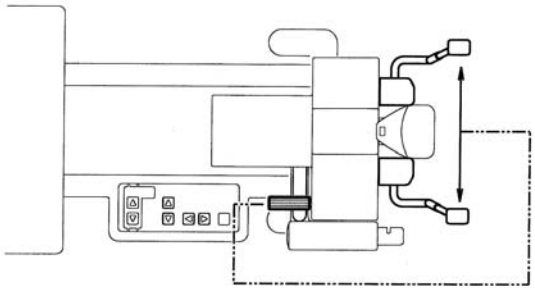

＊Use this knob to hold / release Patient’s head.

４．Exposure Setting Screen

＊Set the Exposure Mode, KvP and mA by using this screen.

５．Names of Beam Line for the Patient Positioning

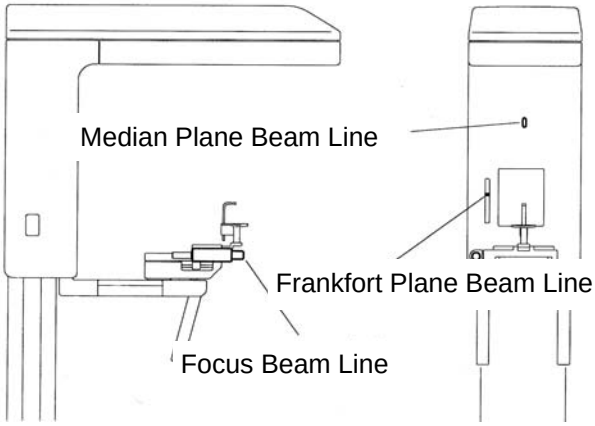

＊ Median Beam Line: Set this beam to the median line of a patient.
＊ Frankfort Beam Line: Set this beam to the Frankfort line of a patient.
＊ Focus Beam Line: Set this beam to the root of anterior teeth of upper and lower jaw of a patient.

６．Lever to open and close the Ear Rod

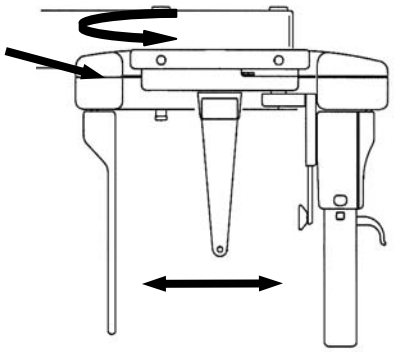

＊ Use this to hold / release Patient’s head

７．Nasion Holding Pad

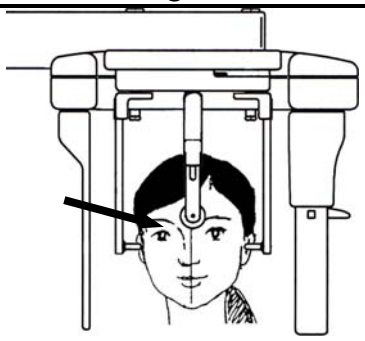

＊ Put patient’s nasion to this pad.

０８．Exposure Setting Screen / Control Panel

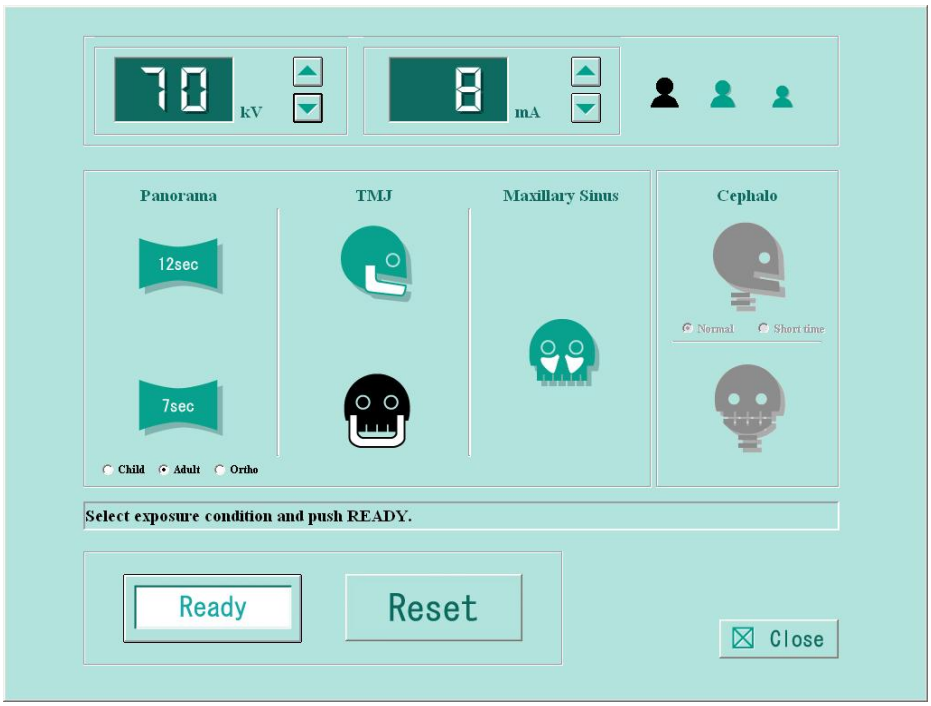

You can access to this exposure setting screen via TWAIN driver.
Click either “Import” or “Scan” from diagnostic software / imaging software.
Operation Procedure section has detailed explanation of exposure settings.

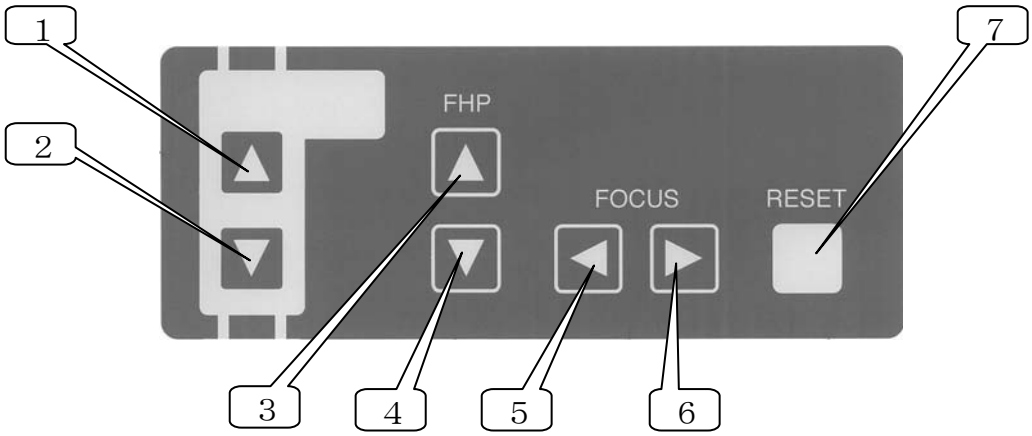

No	Name	Function
1	Sliding Unit UP key	Sliding Unit is elevated.
2	Sliding Unit DOWN key	Sliding Unit is lowered.
3	Frankfort Beam Line UP key	Frankfort Beam Line is elevated.
4	Frankfort Beam Line DOWN key	Frankfort Beam Line is lowered.
5	Focus Beam Line Forward key	Focus Beam Line is moved forward.
6	Focus Beam Line Backward key	Focus Beam Line is moved backward.
7	RESET switch	The Rotation ARM and Cassette Holder are set to the start position.

⚠ CAUTION

Speed of the up / down movement of Sliding Unit changes.
When the up / down key is depressed and held, the speed of first three seconds is slow, then speed becomes fast.
To make a fine adjustment, press the key then immediately release a finger from the key

NOTE

Any of above keys won't work under READY ON condition.

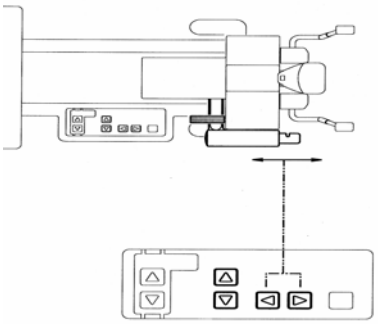

＊Forward and backward movement of the Focus Beam Line.

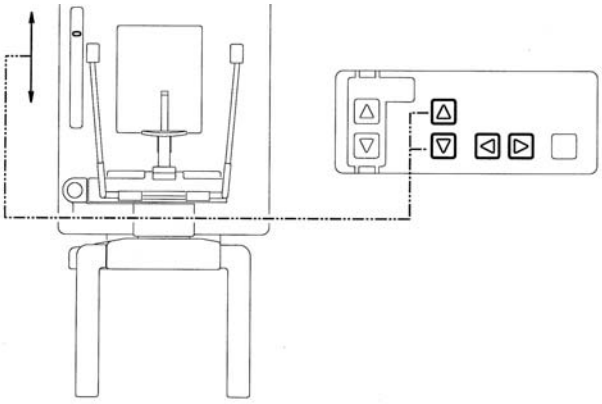

＊Up and down movement of the Frankfort Beam Line.

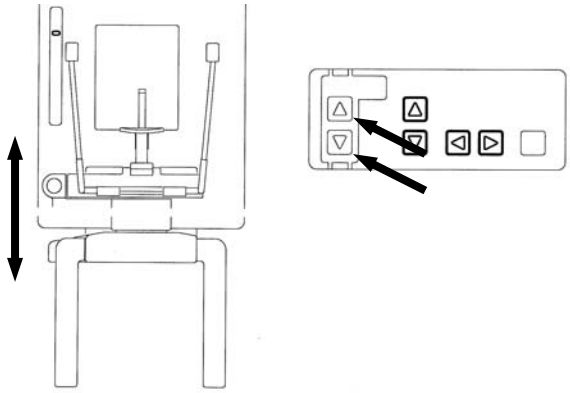

＊Up and down movement of the Sliding Unit.

４．The Operation Panel for Cephalo ARM

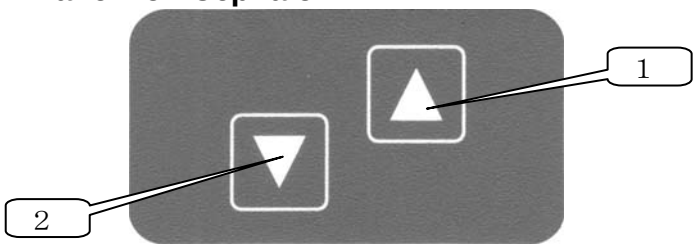

No	Name	Function
1	Sliding Unit UP switch	Sliding Unit is elevated.
2	Sliding Unit DOWN switch	Sliding Unit is lowered.

⚠ CAUTION

Speed of the up / down movement of Sliding Unit changes.
When the up / down key is depressed and held, the speed of first three seconds is slow, then speed becomes fast.
To make a fine adjustment, press the key then immediately release a finger from the key

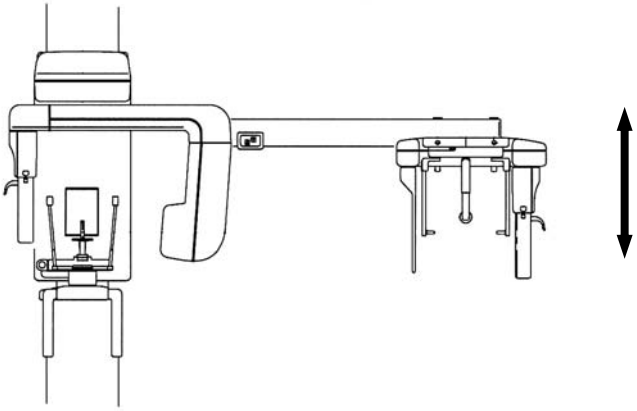

０９．Preparation before exposure

１．Prepare accessories according to exposure mode

１．１．Panorama

1）A pair of Head Holding Rod (Panorama)
2）A Chinrest (Panorama)
3）A Bite Fork
4）A Cover for Bite Fork（a article of consumption）

１．２．Maxillary Sinus

1）A pair of Head Holding Rod (Panorama)
2）A Chinrest (Maxillary Sinus)

１．３．TMJ Lateral 4 sections

A pair of Ear Rod (TMJ Lateral 4 sections)

１．４．TMJ Front 2 sections

A pair of Ear Rod (TMJ Front 2 sections)

２．Attach digital CCD sensor

２．１．Radiography of Panorama・Maxillary sinus・TMJ lateral(tetramerous)・TMJ front (bisection).

①Attach ＣＣＤ sensor

Set up CCD sensor

Hold CCD sensor by both hands and set up CCD sensor.

Secure CCD sensor by connecting sensor’s hook and fall prevention’s hook.

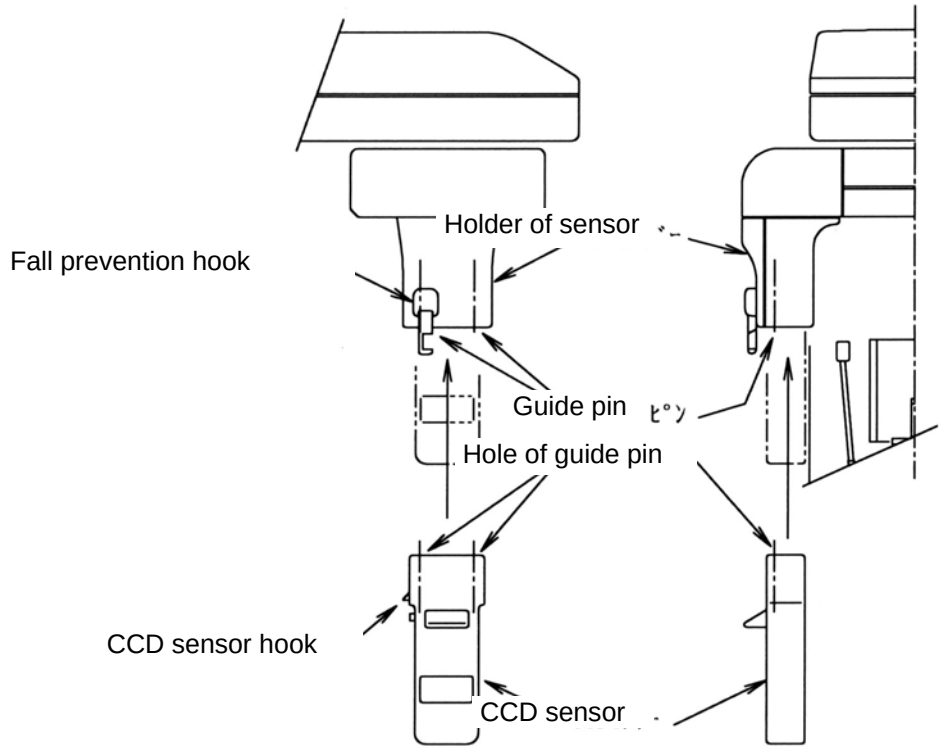

２．２．Cephalo Radiography

①Attach ＣＣＤ sensor

Set up CCD sensor

Hold CCD sensor by both hands and set up CCD sensor.

Secure CCD sensor by connecting sensor's hook and fall prevention's hook.

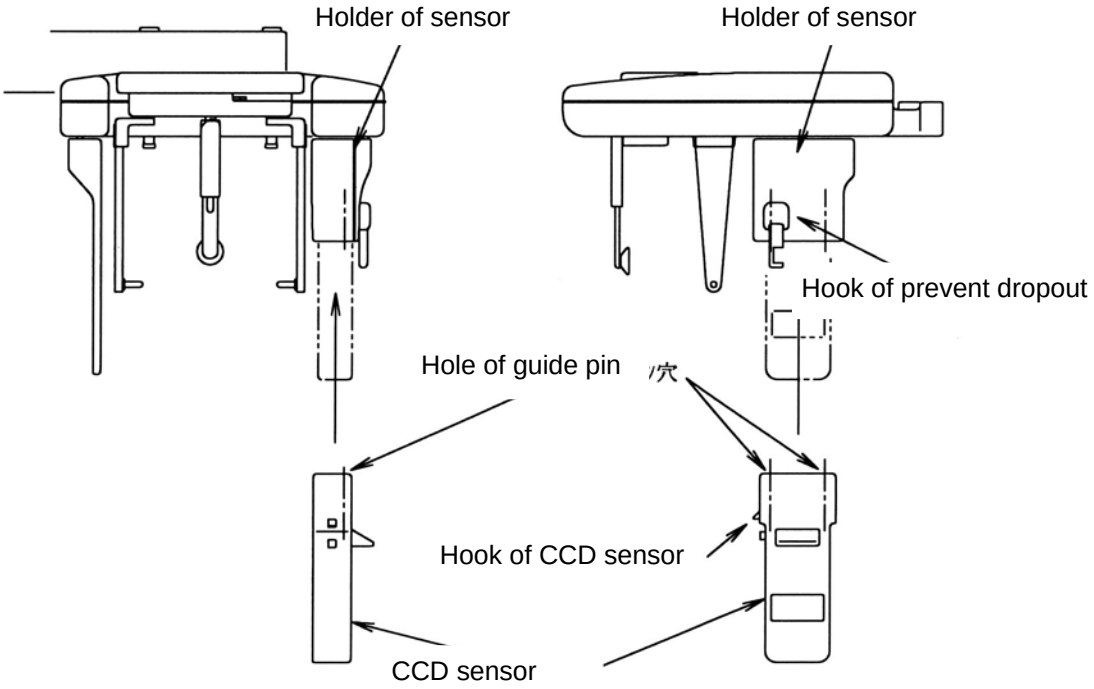

２．X-ray protector apron

１０．Flow Chart of Exposure Operation

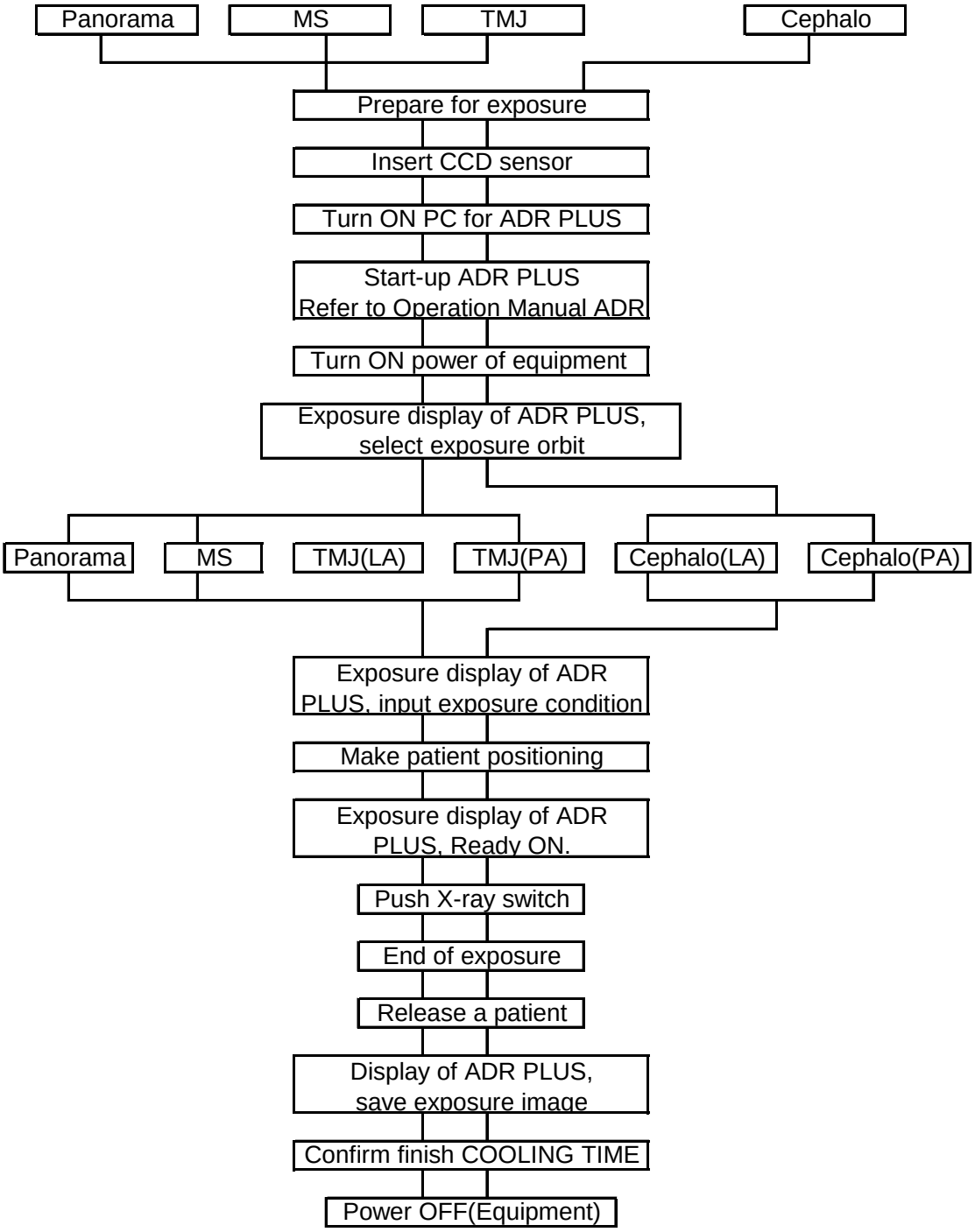

１１．Operation Procedure for Panorama

1. **Learn Panoramic radiographic operation procedure that is basic X-ray radiograph.**
2. **Explanation of operation procedure in other modes that the same operation as Panorama is omitted. Refer to operation procedure for Panorama according to necessity.**

１．Preparation for exposure

Set up CCD sensor

Hold CCD sensor by both hands and set up CCD sensor.

Secure CCD sensor by connecting sensor's hook and fall prevention's hook.

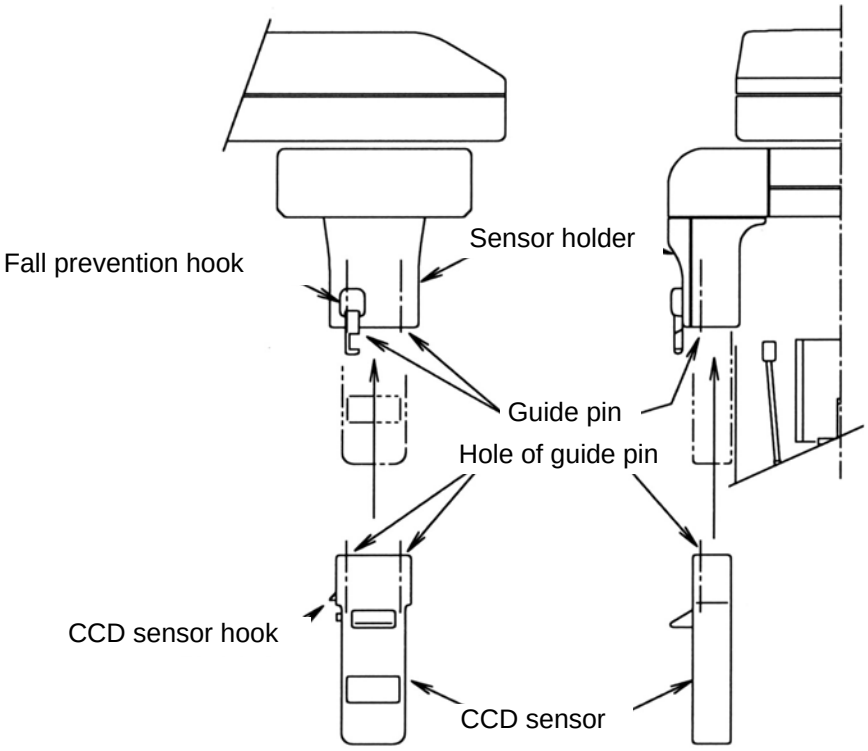

＊X ray protective clothing
＊Head holding for Panorama
＊Chin rest for Panorama
＊Bite fork
＊Bite fork cover

2. Turning power ON

NOTE
For safety, display of the indicator will be turned off with no switch operation if over 5 Minutes passes after turning POWER switch ON.

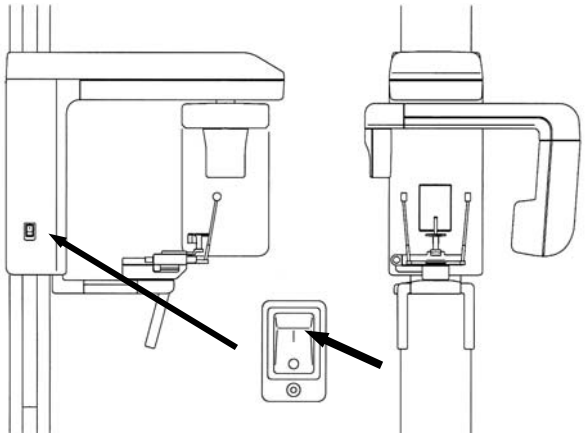

① Push “ I ” on POWER switch.

3. Start Exposure Setting Screen

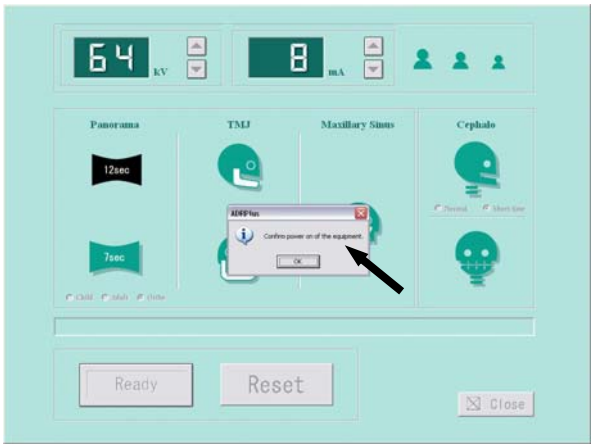

Click either “Import” or “Scan” from diagnostic software / imaging software.

If the power of the equipment is ON, click OK.

Set exposure conditions.

f you receive the message「Equipment is not at the original position. Push the RESET button.」
Then click the「RESET button」.

Select an exposure mode

Click exposure speed “12sec” or “7sec.”
After selection, color of icon will be changed to black.

Click Child or adult or ortho (Ortho radial exposure).
＊Ortho ： Radiography of less tooth overlap.

Setting ｋＶ（tube voltage）・ｍＡ（tube current）

Refer to article 17 for PANORAMA exposure condition and setting exposure condition.

Setting ｋＶ

Click ｋＶ ▲（ＵＰ）・or ▼（ＤＯＷＮ）to set kV.

Click mA ▲（ＵＰ）・or ▼（ＤＯＷＮ）to set mA.

4. Patient Positioning

4. 1. Mounting of Chinrest and Insertion of Head Holding Rod (Panorama)

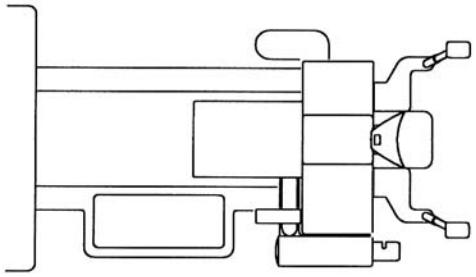

① Mount a Chinrest (Panorama) on the Chinrest Unit.
② Insert a pair of Head Holding Rods (Panorama).

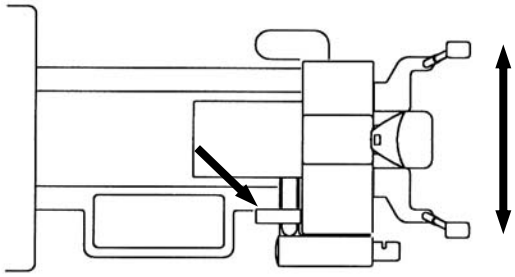

Rotate the knob of Chinrest Unit to open Head Holding Rods maximally.

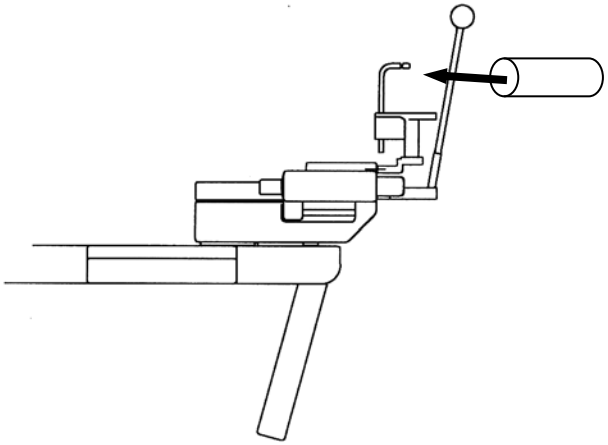

④ Incrust a Bite Fork Cover on a Bite Fork, and insert in a Chinrest (Panorama).

⚠ CAUTION
Be sure to change a Bite Fork Cover for every patient and dispose the used Bite Fork Cover.

4. 2. Put a X-ray protective apron on a patient and on an assistant.

4. 3. Guide a patient near to the equipment.

＊ Depress either UP DOWN key on Beam Control Panel or the one on the Sliding Unit to move height of Chinrest (Panorama). Depress up or down key to bring chinrest height close to patient's mandible.

4. 4. Instruct a patient to stand toward the Pillar with foot under a Chinrest (Panorama).

4. 5. Ask a patient to stand with his or her back and neck as straight as possible. Then hold grips.

4. 6. Position patient

①Depress either UP・DOWN key on Beam Control Panel, to move Chinrest (Panorama) lightly touches patient's mandible.

⚠ CAUTION
Pay enough attention to patient's safety when Sliding Unit moves up and down.

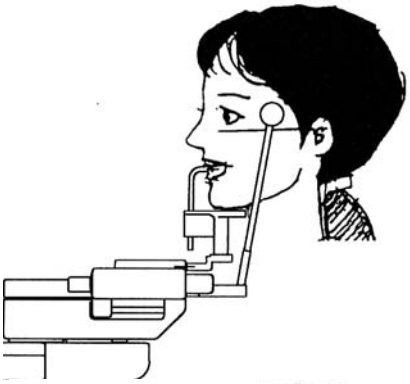

②Instruct a patient to bite a groove of Bite Fork with upper and lower anterior teeth. Instruct a patient to put chin on a Chinrest.

＊For an edentulous patient
Roll clean gauze on a Bite Fork, and instruct patient to bite it.

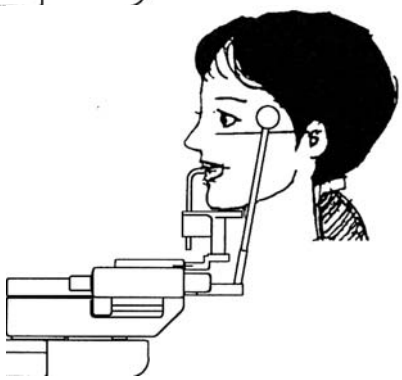

③Adjust the beam height so that the beam hits the patient's miniscule of the ear (hole). Then adjust the patient's head as to beam indicates Frankfort Plane (from miniscule of the ear to bottom of the eye orbit)

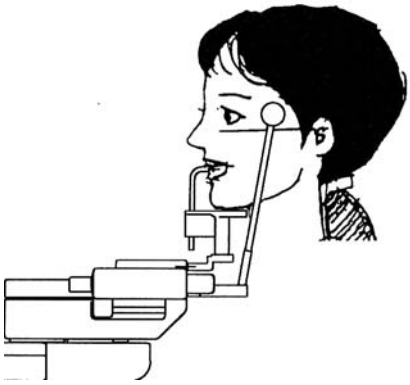

④ Lightly close the Head Holding Rods to position patient's head.

4. ７. Turn Positioning Beams ON.

⚠ CAUTION
1. Laser Beams are used to position a patient. 2. Warn a patient not to look directly at the laser beam line. 3. Do not set the beam line to patient's eyes.

NOTE
Positioning beams have AUTO POWER OFF function. Laser beam will be automatically turned off in 60 seconds after the beam is lit ON, or under READY ON condition. In order to turn the laser on, depress "Forward Movement" key or "Backward Movement" key on FOCUS Beam switch.

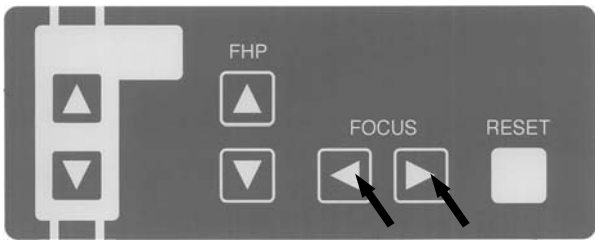

① Depress either Forward Movement ・ or Backward Movement key of FOCUS switch on the Beam Operation Panel to turn Patient Positioning Beams on.

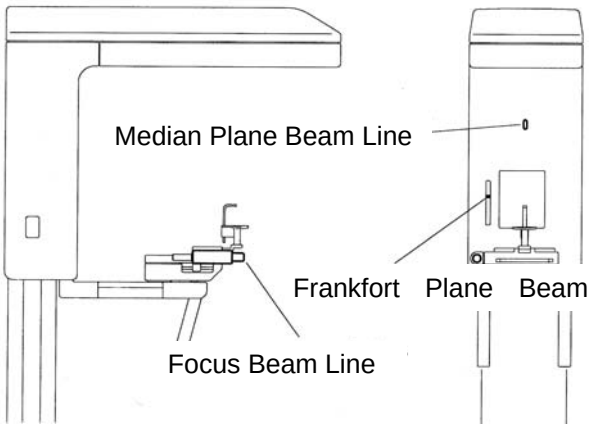

②"Median Beam Line", "Focus Beam Line", and "Frankfort Plane Beam Line" are equipped

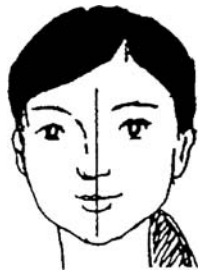

③Adjust the patient's head so that the Median Line Beam comes to the center of the patient's face,

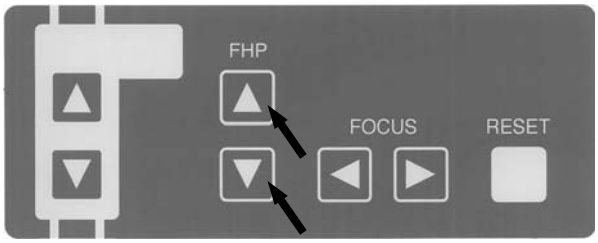

④ Depress either UP・DOWN key of Frankfort Beam on Beam Operation Panel and align Frankfort Beam Line with Frankfort Plane of a patient.

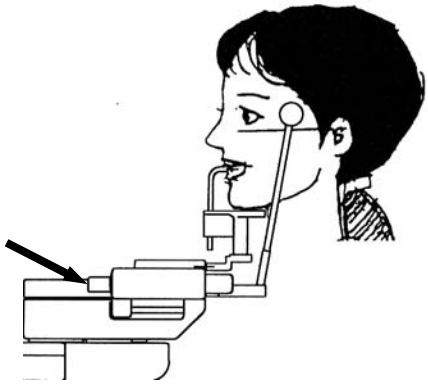

⑤ Carefully close Head Holding Rods to sup port the patient's head.

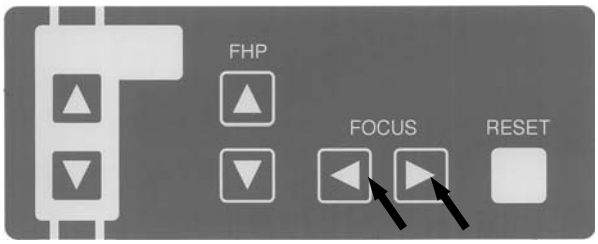

⑥ Depress either Forward Movement・or Backward Movement key of FOCUS Beam switch on Beam Operation Panel, and align Focus Beam Line with roots of upper and lower anterior teeth.

＊When you align the Focus Beam Line, look a patient from the side.

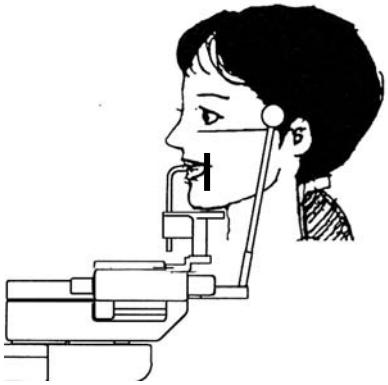

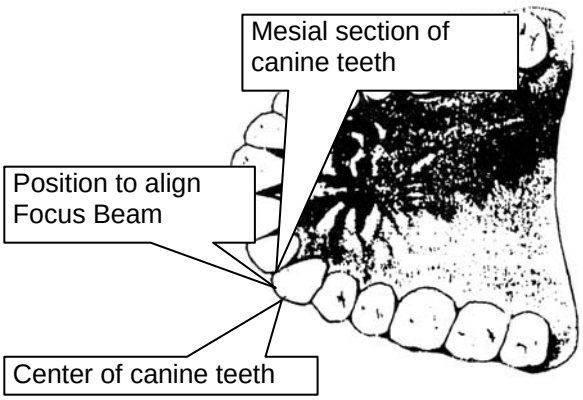

＊ Align the Focus Beam Line around Mesial section of canine teeth

5. READY ON

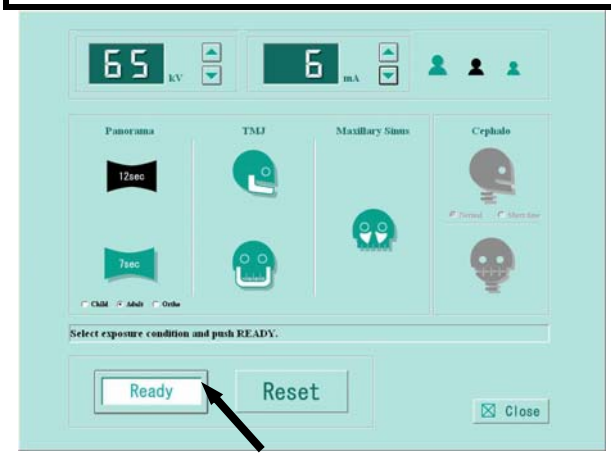

①Click 「READY」

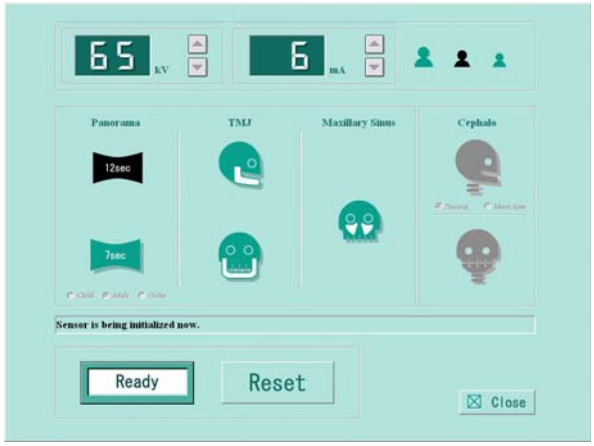

②Flash green「READY」icon,「initialization of sensor」will be displayed and CCD sensor will be initialed.

③After finish initialization of sensor,「READY」icon will be changed to green, then「Start exposure」will be displayed.

6. X-ray Exposure

⚠ WARNING

1. Other people except a patient and an operator should be outside of X-ray room.
2. The X-ray exposure switch should be depressed from outside of a X-ray room.
3. Carefully observe a patient while X-ray is irradiated, release an Exposure switch immediately when any trouble happens.
4. Instruct a patient not to move while X-ray is irradiated.

⚠ CAUTION

The Rotation Unit starts to rotate and X-ray will be irradiated when an exposure switch is depressed. Move away from the rotation area of the rotation unit.

NOTE

1. The exposure switch is deadman type. X-ray irradiation and the movement of the Rotation Unit will stop as soon as the exposure switch is released.
2. If exposure switch is released while X-ray is irradiated, release a patient and depress ＲＥＳＥＴ key to bring Rotation Unit to the start position. Place a new X-ray film and take a radiograph again.

6. １. Exposure switch should be kept to push until end of exposure.

6. ２. ARM Unit will start to rotate, “X-RAY ON” will be indicated on Indicator, and X-ray irradiation will start with intermittent noise.

6. ３. While X-ray is irradiated, indication of 「Ｘ－ＲＡＹ　ＯＮ」 blinks and buzzer keeps to sound intermittently.

6. ４. After end of radiograph, X-RAY indication will be lighted OFF, buzzer will stops to sound, and ARM Unit will stop to rotate.

6. ５. After exposure, data transfer on the display will be displayed.

7. COOLING TIME

NOTE
1. X-ray cannot be irradiated during COOLING TIME.
2. Any key operation excepting RESET key cannot be operated during COOLING TIME.
3. Do not turn power OFF until end of COOLING TIME.

After exposure, automatically cooling time will work.

Between cooling time, Cooling time」will be displayed.
After cooling time is elapsed, Cooling time」will be disappeared.

8. Release of a patient

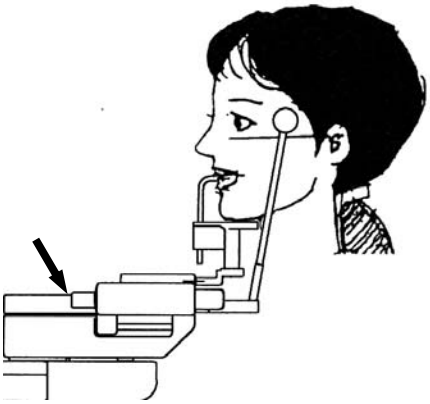

＊ Carefully open Head Holding Rods and release a patient.

9. Return the Rotation Unit to the Start Position

Click the「RESET button」.

Or Hit Reset Key

１０. Turning Power OFF

⚠ WARMING
To prevent the risk of accident, turn the power switch off when the unit is not in use.

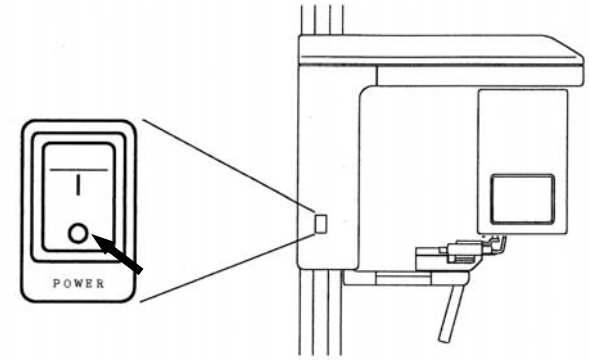

＊ Depress “O” key on POWER switch.

１２．Operation Procedures for Maxillary Sinus

1. Learn the Panoramic radiographic operation procedures well. You can utilize Panoramic operating procedures for other modes.

2. If procedures are the same as the ones of Panorama, explanations of operation procedures in other modes are omitted. If you have any questions, Refer to operation procedures for Panorama.

１．Preparation for the Exposure

＊ X-ray Protective Apron
＊ Pair of Head Holding Rods (Panorama)
＊ Chinrest (Maxillary Sinus)

２．Turning Power ON

Refer to １１．３ Turning Power On in Operation procedure for Panoramic radiograph

3. Start Exposure Setting Screen

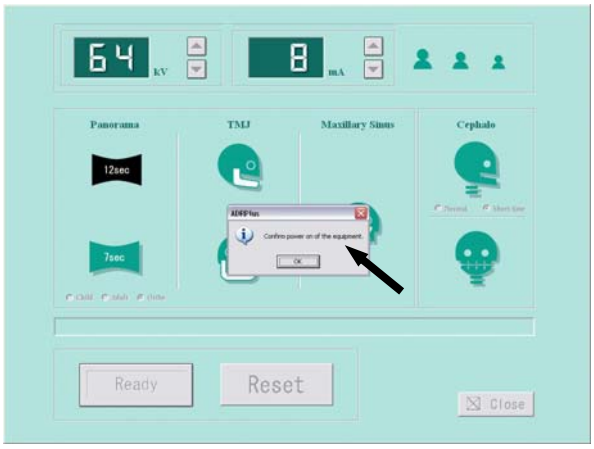

Click either “Import” or “Scan” from diagnosticsoftw are / imaging software.

If the power of the equipment is ON, click OK.

Set exposure conditions.

If you receive the message「Equipment is not at the original position. Push the RESET button.」 Then click the「RESET button」.

Setting the exposure mode

Click mark of maxillary sinus.
After select, mark will be changed to black.

Setting ｋＶ（tube voltage）・ｍＡ（tube current）

Refer to article 17 for PANORAMA exposure condition and setting exposure condition.

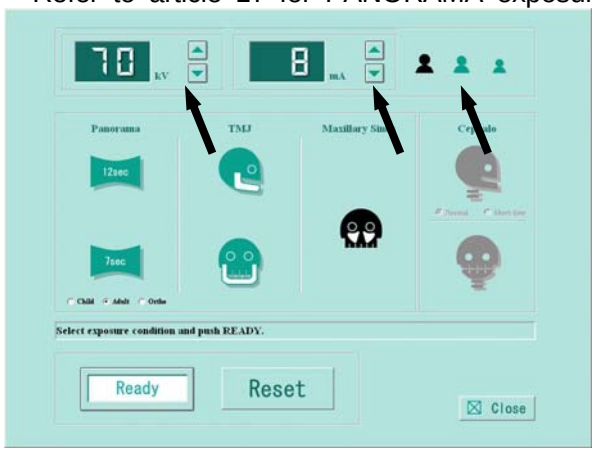

Setting ｋＶ
Click ｋＶ ▲（ＵＰ）・or ▼（ＤＯＷＮ）to set kV.

Click mA ▲（ＵＰ）・or ▼（ＤＯＷＮ）to set mA.

4. Patient Positioning

NOTE
Patient positioning is the most important process to obtain the best radiographs.

4. 1. Mounting of Chinrest and Insertion of Head Holding Rod (Maxillary Sinus)

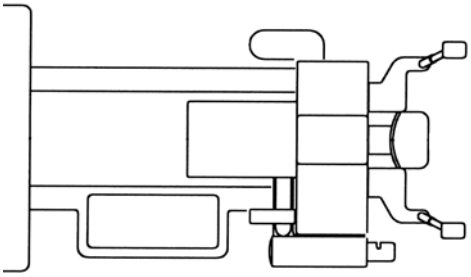

③ Mount Chinrest (Maxillary Sinus) on the Chinrest Unit.

④ Insert a pair of Head Holding Rods (Maxillary Sinus)

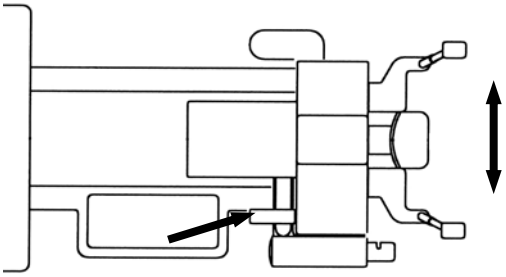

③ Rotate the knob of Chinrest Unit to open Head Holding Rods maximally.

4. 2. Instruct a patient and an assistant to wear a X-ray protective apron.

4. 3. Guide a patient near to the equipment.

＊ Depress either UP DOWN key on the Beam Control Panel or the one on the Sliding Unit to move height of Chinrest (Maxillary Sinus). Depress up or down key to bring the chinrest height close to patient's mandible.

4. 4. Instruct a patient to stand in the same position as Panoramic radiography.

4. 5. Ask a patient to stand with his or her back and neck as straight as possible. Then hold grips.

4. ６. Position patient

①Depress either ＵＰ・ＤＯＷＮ key on Beam Control Panel to move the Chinrest (Maxillary Sinus) lightly touches patient's mandible.

⚠ CAUTION

Pay enough attention to patient's safety when the Sliding Unit moves up and down.

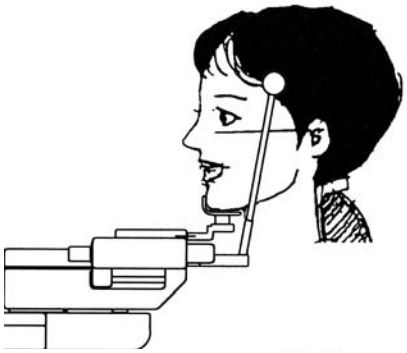

② Adjust the beam height so that the beam hits the patient's miniscule of the ear (hole). Then adjust the patient's head as to beam indicates Frankfort Plane (from miniscule of the ear to bottom of the eye orbit)

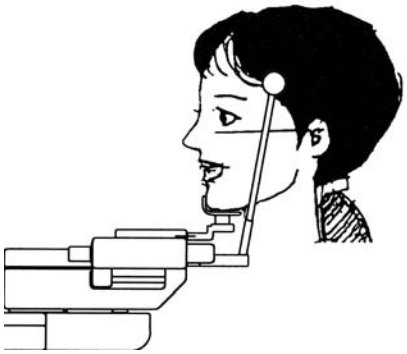

③Lightly close the Head Holding Rods to position patient's head.

4. ７. Turn Positioning Beams ON.

⚠ CAUTION

1. Laser Beams are used to position a patient.
2. Warn a patient not to look directly at the laser beam line.
3. Do not set the beam line to patient's eyes.

NOTE

Positioning beams have AUTO POWER OFF function. Laser beam will be automatically turned off in 60 seconds after the beam is lit ON, or under READY ON condition.

In order to turn the laser on, depress "Forward Movement" key or "Backward Movement" key on FOCUS Beam switch.

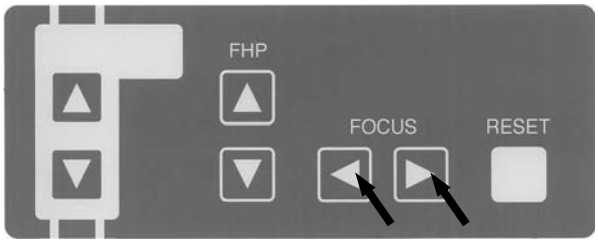

① Depress either Forward Movement ・ or Backward Movement key of FOCUS switch on the Beam Operation Panel to turn Patient Positioning Beams on.

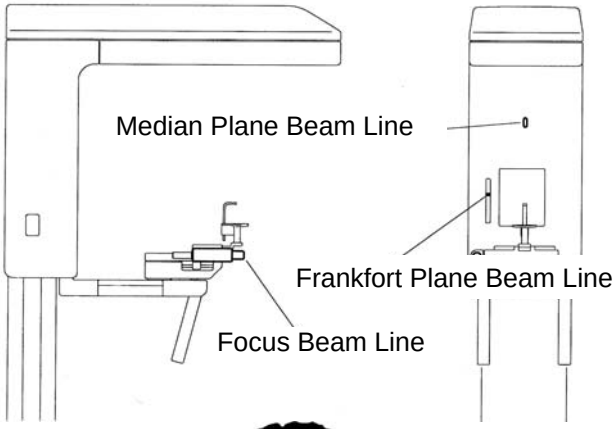

②”Median Beam Line”, “Focus Beam Line”, and ”Frankfort Plane Beam Line” are equipped

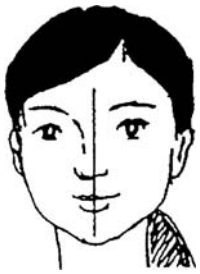

③Adjust the patient’s head so that the Median Line Beam comes to the center of the patient’s face,

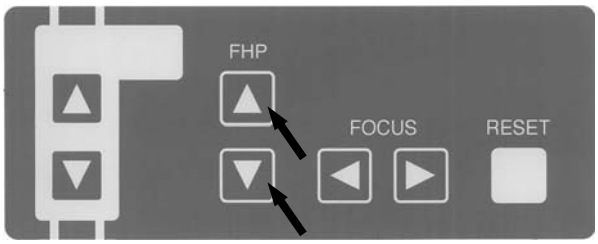

④ Depress either UP ・ DOWN key of Frankfort Beam on Beam Operation Panel and align Frankfort Beam Line with Frankfort Plane of a patient.

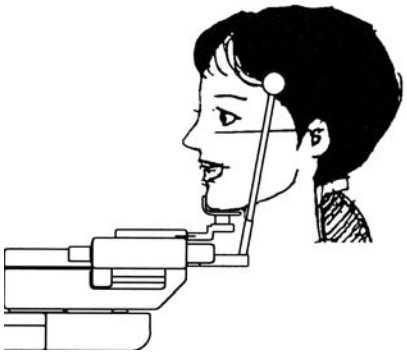

⑤ Carefully close the Head Holding Rods to supp ort the patient’s head.

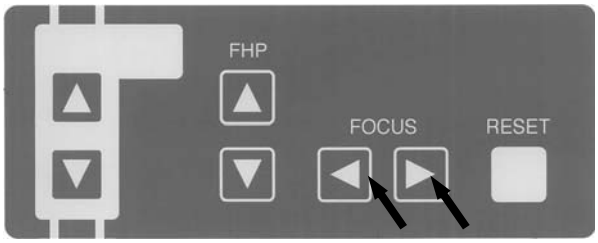

⑥Depress either Forward Movement・or Backward Movement key of FOCUS Beam switch on the Beam Operation Panel, and align Focus Beam Line with roots of upper and lower anterior teeth.

5. READY ON

Please refer to 11. Operation Procedure for Panorama

6. X-ray Exposure

Refer to 11. Operation Procedure for Panorama

7. COOLING TIME

Refer to 11. Operation Procedure for Panorama

8. Release of a patient

Refer to 11. Operation Procedure for Panorama

9. Return Rotation Unit to Start Position

Refer to 11. Operation Procedure for Panorama

10. Turning Power OFF

Refer to 11. Operation Procedure for Panorama

１３．Operation Procedures for TMJ Lateral (4 sections)

1. **Learn the Panoramic radiographic operation procedures well. You can utilize Panoramic operating procedures for other modes.**
2. **If procedures are the same as the ones of Panorama, explanations of operation procedures in other modes are omitted. If you have any questions, Refer to operation procedures for Panorama.**

１．Preparation for the Exposure

＊X-ray Protective Apron
＊Pair of Ear Rods (TMJ Lateral)

２．Turning Power ON

Refer to １１．３ Turning Power On in Operation procedure for Panoramic radiograph

3. Start Exposure Setting Screen

Click either “Import” or “Scan” from diagnosticsoftw are / imaging software.

If the power of the equipment is ON, click OK.

Set exposure conditions.

If you receive the message「Equipment is not at the original position. Push the RESET button.」Then click the「RESET button」.

Setting the exposure mode

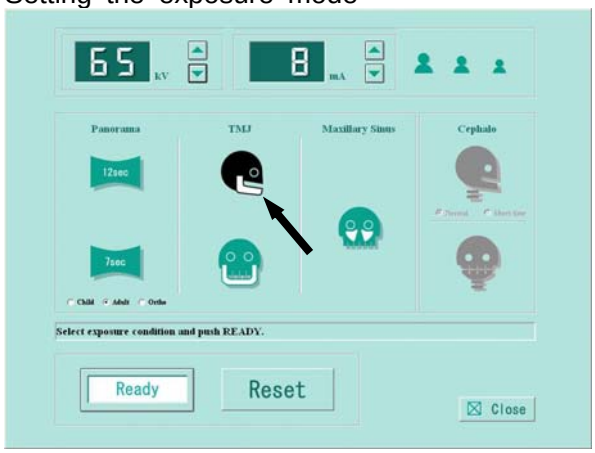

Click mark of mandibular joint lateral.
After select, mark will be changed to black.

Setting ｋＶ（tube voltage）・ｍＡ（tube current）

Refer to article 17 for PANORAMA exposure condition and setting exposure condition.

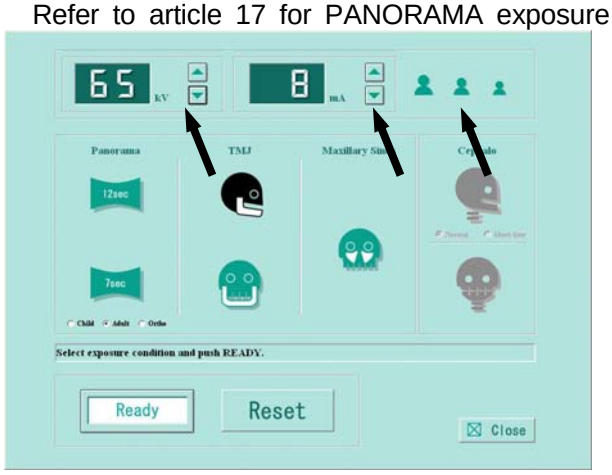

Setting ｋＶ
Click ｋＶ ▲（ＵＰ）・or ▼（ＤＯＷＮ）to set kV.

Setting mA
Click mA ▲（ＵＰ）・or ▼（ＤＯＷＮ）to set mA.

4. Patient Positioning

4. 1. Mounting Ear Rods(TMJ Lateral)

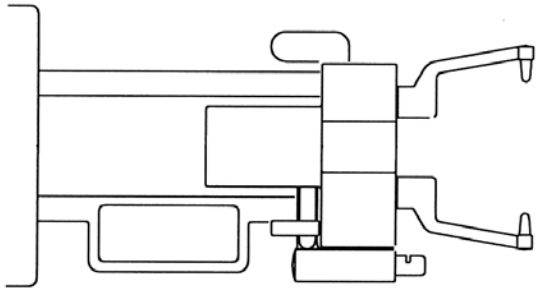

① Mount Ear Rods (TMJ Lateral) on the Chinrest Unit.

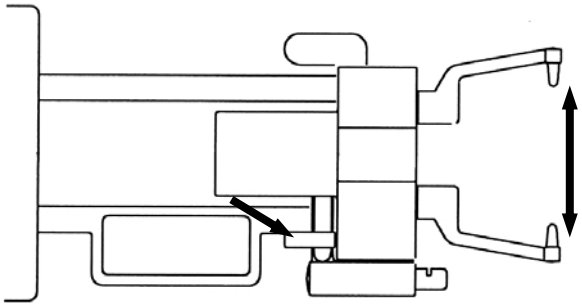

② Rotate the knob of the Chinrest Unit to open Ear Rods (TMJ Lateral) maximally.

4. 2. Instruct a patient and an assistant to wear X-ray protective apron.

4. 3. Guide a patient near to the equipment.

Depress either UP DOWN key on the Beam Control Panel or the one on the Sliding Unit to move position of Ear Rods(TMJ Lateral). Bring ear rods close to patient's external auditory foramen.

4. 4. Instruct a patient to stand in the same position as Panoramic radiography.

4. 5. Ask a patient to stand with his or her back and neck as straight as possible. Then hold grips.

Depress either UP DOWN key on the Beam Control Panel or the one on the Sliding Unit to move position of Ear Rods(TMJ Lateral). Align ear rods to patient's external auditory foramen.

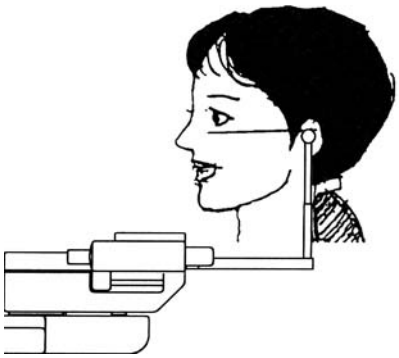

② Adjust the beam height so that the beam hits the patient's miniscule of the ear (hole). Then adjust the patient's head as to beam indicates Frankfort Plane (from miniscule of the ear to bottom of the eye orbit)

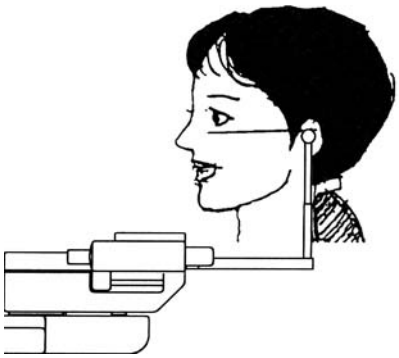

③ Rotate the knob of Chinrest ASSY to insert Ear Rods (TMJ Lateral) into auricular holes of a patient and fix Ear Rod lightly.

4. ６. Turn Positioning Beams ON

⚠ CAUTION
1. Laser Beams are used to position a patient. 2. Warn a patient not to look directly at the laser beam line. 3. Do not set the beam line to patient's eyes.

NOTE
Positioning beams have AUTO POWER OFF function. Laser beam will be automatically turned off in 60 seconds after the beam is lit ON, or under READY ON condition. In order to turn the laser on, depress "Forward Movement" key or "Backward Movement" key on FOCUS Beam switch.

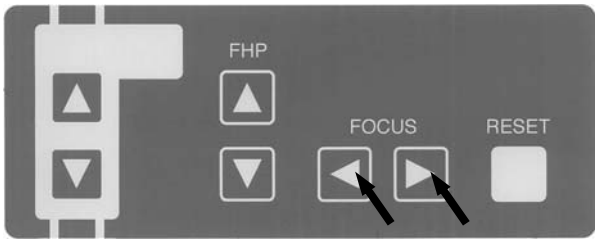

① Depress either Forward Movement・ or Backward Movement key of FOCUS switch on the Beam Operation Panel to turn Patient Positioning Beams on.

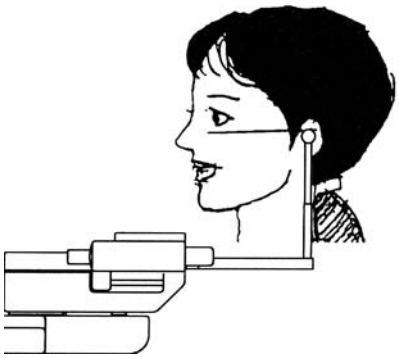

③Adjust the beam height so that the beam hits the patient's miniscule of the ear (hole). Then adjust the patient's head as to beam indicates Frankfort Plane (from miniscule of the ear to bottom of the eye orbit)

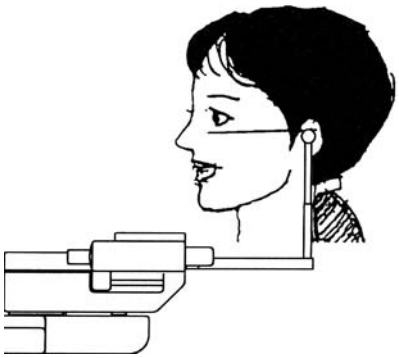

④Rotate the knob of the Chinrest ASSY to insert Ear Rods (TMJ Lateral) into auricular holes of a patient and fix Ear Rod.

5. READY ON

Refer to １１. Operation Procedure for Panorama

6. X-ray Exposure

⚠ WARNING

1. Other people except a patient and an operator should be outside of X-ray room.
2. The X-ray exposure switch should be depressed from outside of a X-ray room.
3. Carefully observe a patient while X-ray is irradiated, release an Exposure switch immediately when any trouble happens.
4. Instruct a patient not to move while X-ray is irradiated.

⚠ CAUTION

The Rotation Unit starts to rotate and X-ray will be irradiated when an exposure switch is depressed. Move away from the rotation area of the rotation unit.

NOTE

1. The exposure switch is deadman type. X-ray irradiation and the movement of the Rotation Unit will stop as soon as the exposure switch is released.
2. If exposure switch is released while X-ray is irradiated, release a patient and depress RESET key to bring Rotation Unit to the start position. Place a new X-ray film and take a radiograph again.

6. １. TMJ Lateral 4 sections consist of a series of two exposures. 1st exposure for the diagnosis of TMJ with mouth closed and 2nd exposure for TMJ with mouse open.

6. ２. Ask patient to close the mouth

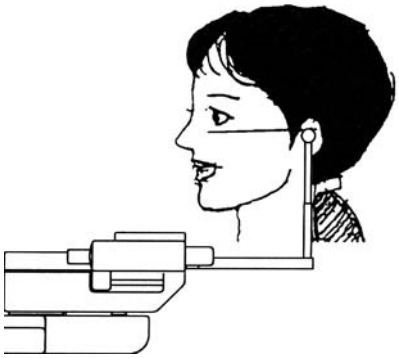

6. ３. Depress an exposure switch and hold until the end of exposure.

6. ４. The Rotation Unit starts to rotate, X-RAY is indicated on indicator, and buzzer starts to sound intermittently.

6. ５. While X-RAY is irradiated, 「Ｘ－ＲＡＹ　ＯＮ」 display blinks and an audible warning will sound.

6. ６. After the end of first exposure, X-RAY indication display is turned OFF, an audible warning stops, the Rotation Unit stops to rotate, then returns to the start position automatically.

6. ７. Ask patient to open the mouth by lowering mandible

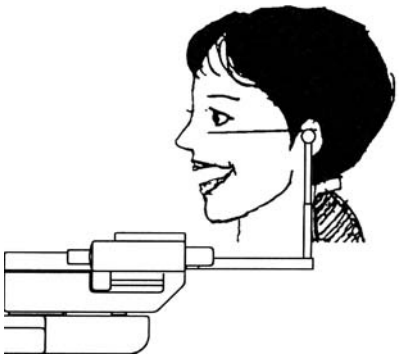

6. ８. Depress “READY” key to get into READY ON condition.

6. ９. Depress an exposure switch and hold until the end of exposure.

6. 10. ARM Unit starts to rotate, X-RAY will be indicated on indicator, and buzzer will start to sound at the same time.

6. 11. X-RAY keeps to be indicated and buzzer keeps to sound.

6. 12. After 2nd exposure is finished, X-RAY will be lighted OFF, and buzzer will stop to sound and ARM Unit will stop to rotate.

6. 13. Refer to section 11.Operation procedure for Panorama and 8.X-ray exposure.

7. COOLING TIME

Refer to １１. Operation Procedure for Panorama

8. Release of a patient

Refer to １１. Operation Procedure for Panorama

9. Return Rotation Unit to Start Position

Refer to１１. Operation Procedure for Panorama

10. Turning Power OFF

Refer to １１. Operation Procedure for Panorama

１４．Operation Procedures for TMJ Frontal (2 sections)

1. Learn the Panoramic radiographic operation procedures well. You can utilize Panoramic operating procedures for other modes.

2. If procedures are the same as the ones of Panorama, explanations of operation procedures in other modes are omitted. If you have any questions, Refer to operation procedures for Panorama.

１．Preparation for the Exposure

＊X-ray Protective Apron

＊Pair of Ear Rods (TMJ Front)

２．Turning Power ON

Refer to １１．Operation Procedure for Panorama　３．Turning Power ON

３．Start Exposure Setting Screen

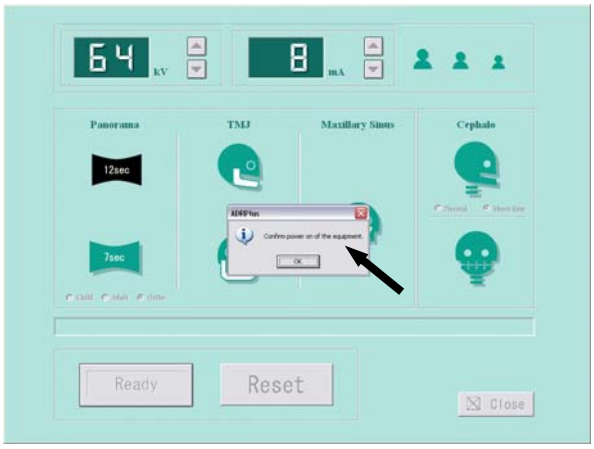

Click either “Import” or “Scan” from diagnostics oftware / imaging software.

If the power of the equipment is ON, click OK.

Set exposure conditions.

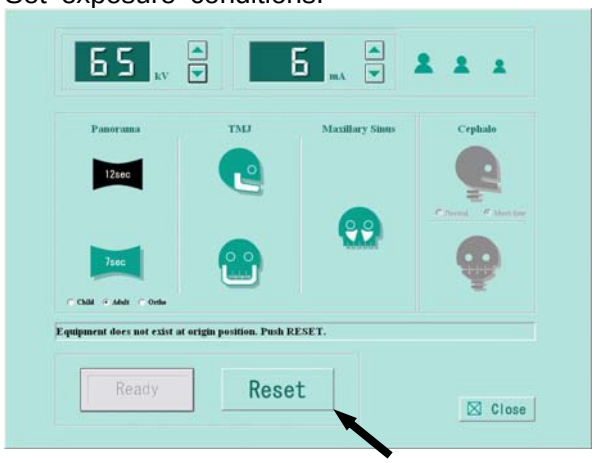

If you receive the message「Equipment is not at the original position. Push the RESET button.」Then click the「RESET button」.

Setting the exposure mode

Click icon of mandibular joint front.
After select, icon will be changed to black.

Setting ｋＶ（tube voltage）・ｍＡ（tube current）

Refer to article 17 for PANORAMA exposure condition and setting exposure condition.

Setting ｋＶ
Click ｋＶ ▲（ＵＰ）・or ▼（ＤＯＷＮ）to set kV.

Setting mA
Click mA ▲（ＵＰ）・or ▼（ＤＯＷＮ）to set mA.

4. Patient Positioning

4. 1. Mounting Ear Rods (TMJ Front)

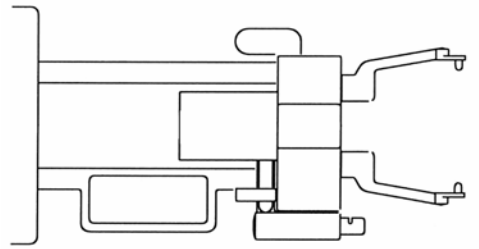

①Mount “Ear Rods (TMJ Frontal) on the Chinrest Unit.

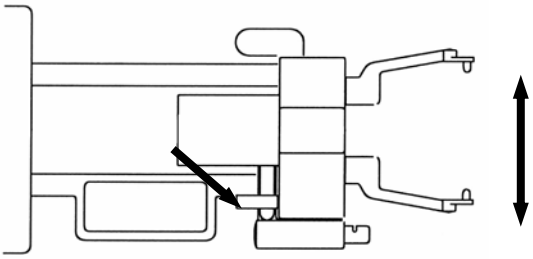

②Rotate the knob of the Chinrest Unit to open Ear Rods (TMJ Front) maximally.

4. 1. Instruct a patient and an assistant to wear X-ray protective apron.

4. 2. Guide a patient near to the equipment.

Depress either UP DOWN key on the Beam Control Panel or the one on the Sliding Unit to move position of Ear Rods (TMJ Lateral).
Bring ear rods close to patient’s external auditory foramen.

4. 3. Instruct a patient to stand in the same position as Panoramic radiography

4. 4. Ask a patient to stand with his or her back and neck as straight as possible. Then hold grips.

Depress either UP DOWN key on the Beam Control Panel or the one on the Sliding Unit to move position of Ear Rod(TMJ Frontal).
Align ear rods to patient’s external auditory foramen.

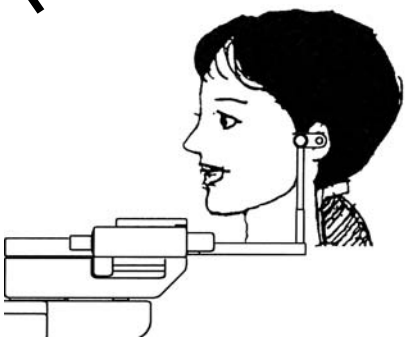

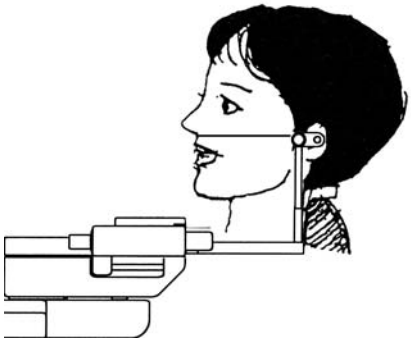

② Horizontally align to the patient's naso-auricularplane.

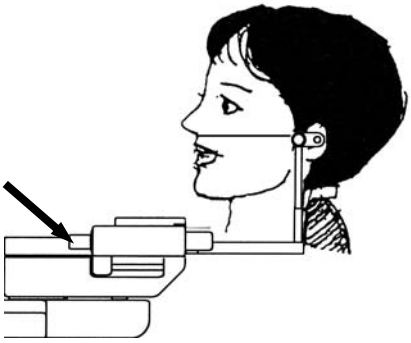

③Rotate the knob of the Chinrest ASSY to insert Ear Rod (TMJ Frontal) into auricular holes of a patient and fix Ear Rod lightly.

4. ５. Turn Positioning Beams ON

⚠ CAUTION
1. Laser Beams are used to position a patient. 2. Warn a patient not to look directly at the laser beam line. 3. Do not set the beam line to patient's eyes.

NOTE
Positioning beams have AUTO POWER OFF function. Laser beam will be automatically turned off in 60 seconds after the beam is lit ON, or under READY ON condition. In order to turn the laser on, depress "Forward Movement" key or "Backward Movement" key on FOCUS Beam switch.

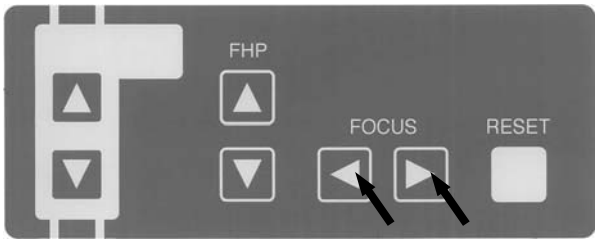

Depress either Forward Movement ・or Backward Movement key of FOCUS switch on the Beam Operation Panel to turn Patient Positioning Beams on.

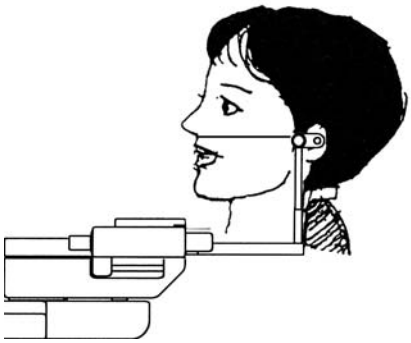

③ Adjust beam height so that Frankfort beam hits the naso-auricular plane

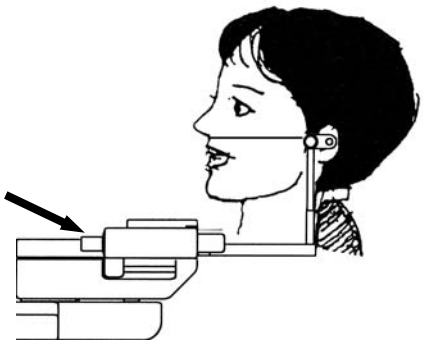

④Rotate the knob of the Chinrest ASSY to insert Ear Rods (TMJ Lateral) into auricular holes of a patient and fix Ear Rod.

5. READY ON

Refer to １１. Operation Procedure for Panorama ７. READY ON.

6. X-ray Exposure

⚠ WARNING

１. Other people except a patient and an operator should be outside of X-ray room.
２. The X-ray exposure switch should be depressed from outside of a X-ray room.
３. Carefully observe a patient while X-ray is irradiated, release an Exposure switch immediately when any trouble happens.
４. Instruct a patient not to move while X-ray is irradiated.

⚠ CAUTION

The Rotation Unit starts to rotate and X-ray will be irradiated when an exposure switch is depressed.
Move away from the rotation area of the rotation unit.

NOTE

１. The exposure switch is deadman type. X-ray irradiation and the movement of the Rotation Unit will stop as soon as the exposure switch is released.
２. If exposure switch is released while X-ray is irradiated, release a patient and depress RESET key to bring Rotation Unit to the start position. Place a new X-ray film and take a radiograph again.

6. １. Depress an exposure switch and hold until the end of exposure.

6. ２. The Rotation Unit starts to rotate, X-RAY is indicated on indicator, and buzzer starts to sound intermittently.

6. ３. While X-RAY is irradiated, 「Ｘ－ＲＡＹ　ＯＮ」 display blinks and an audible warning will sound

6. ４. After the end of the exposure, X-RAY indication display is turned OFF, an audible warning stops, and the Rotation Unit stops to rotate.

7. COOLING TIME

Refer to １１. Procedure of Panorama Exposure Operation

8. Release of a Patient

Refer to １１. Procedure of Panorama Exposure Operation

9. Return Rotation Unit to Start Position

Refer to １１. Procedure of Panorama Exposure Operation

１0. Turning Power OFF

Refer to １１. Procedure of Panorama Exposure Operation